Nous nous réservons tous les droits sur ce document, ainsi que sur l'objet y figurant. La reproduction, l'usage ou la communication à des tiers sans notre autorisation formelle est illicite.
© ASEA BROWN BOVERI 1995

We reserve all rights in this document and in the information contained therein. Reproduction, use or disclosure to third parties without express authority is strictly forbidden.
© ASEA BROWN BOVERI 1995

Für dieses Dokument und den darin dargestellten Gegenstand behalten wir uns alle Rechte vor. Vervielfältigung, Bekanntgabe an Dritte oder Verwertung seines Inhalts sind ohne unsere ausdrückliche Zustimmung verboten.
© ASEA BROWN BOVERI 1995

PLANT: NORNE 5MVA, 2 UNITS
ORDER No.: 11045519

VOLTAGE REGULATOR

UNITROL 1000 - 15

	FOR INFORMATION
	FOR APPROVAL
	FOR FABRICATION
X	AFTER DELIVERY
	AFTER COMMISSIONING

revision				
B	07-06-19	issued	Allegretti	
	07-06-19	check 1	Ehlen	
		check 2		
	07-06-19	released	Gentner	

der. from | repla. | repl.by

office resp: ATPE

title: COVER SHEET

NORNE 5044

< | > 002

doc. | format A3 | lang. E | 3BHS233752E20

page 001 | no. of pages 19

PAGE No.	TITLE	REV.			
/001	COVER SHEET	A	B		
/002	LIST OF CONTENTS	A	B		
/005	LIST OF SYMBOLS				
/006	LIST OF SYMBOLS				
/010	BLOCK DIAGRAM	A	B		
/060	LIST OF COMPONENTS	A	B		
/061	LIST OF COMPONENTS	A			
/120	CONVERTER SUPPLY & AC-SUPPLY		B		
/130	DC-SUPPLY & AUX AC-SUPPLY	A	B		
/150	FCB CONTROL	A	B		
/160	CONTROL CIRCUITS	A			
/170	CONTROL CIRCUITS	A	B		
/190	CONTROL CIRCUITS FEEDBACK	A	B		
/200	AVR		B		
/210	ANALOGUE IN/OUTPUTS	A	B		
/220	CONTROL CIRCUITS		B		
/230	BOOST	A			
/240	DC-OUTPUT	A	B		
/900	LIST OF TERMINALS	A	B		

revision		issued	Allegretti
A		check 1	Ehlen
B		check 2	
		released	Gentner

der. from | repla. | repl.by

ABB

office resp: ATPE

title: LIST OF CONTENTS

NORNE 5044

001 < > 005

doc. | format A3 | lang. E

3BHS233752E20

page 002 | no. of pages

	SIGNAL COMMON
	GROUND CONNECTION
	EMC CONNECTION: -CHS: CHASSIS CONNECTION (SCREW) -W109: EARTHING STRAP CONNECTION
	ONLY ONE CABLE CONNECTION POSSIBLE
	TERMINAL
	TEST POINT
X1000	SOLDERING POINTS CLOSED
X1000	SOLDERING POINTS OPEN
R1000	ELEMENT ON SOLDERING POINTS: INSERTED (e.g.RESISTOR)
C1000	ELEMENT ON SOLDERING POINTS: NOT EQUIPPED (e.g.CAPACITOR)
S1	JUMPER NORMALLY OPEN
S1	JUMPER NORMALLY CLOSED
S1	JUMPER WITH SWITCHOVER CONTACTS

ELEMENTS ON SOLDERING POINTS
SOLDERING POINTS
JUMPERS
— SHOWN IN DEFAULT POSITIONS

FOR FINAL SETTINGS SEE TESTREPORT

	TWISTED PAIR CABLE
	SHIELDED CABLE
26 W150	MULTIWIRE CABLE WITH CONNECTOR
1 2 3 4 5 6 X10	CONNECTOR WITH PIN NUMBERS
-X_NC_n	NOT CONNECTET SHIELD END
	DIODE
	ZENER DIODE
	LED
	THYRISTOR
	BREAK OVER DIODE (BOD)
	OPTO-COUPLER

	RESISTOR
	RESISTOR ADJUSTABLE
	POTENTIOMETER
	RESISTOR NON LINEAR
U	RESISTOR VOLTAGE DEPENDENT (VARISTOR)
+T	RESISTOR TEMPERATURE DEPENDENT (PTC)
+ -	SHUNT
	CAPACITOR
	FUSE
	FUSE WITH AUX.CONTACT
	HEATER
	INDICATION LAMP ILLUMINATION

	CONTACT CONTACT NORMALLY OPEN MAKE CONTACT
	CONTACT CONTACT NORMALLY CLOSED BREAK CONTACT
	CHANGEOVER CONTACT
	CONTACT ON DELAY
	CONTACT OFF DELAY
	WIPING CONTACT
	CONTACT CONTACT NORMALLY OPEN EARLY CLOSING
	CHANGEOVER CONTACT WITHOUT INTERRUPTION
T	CIRCUIT BREAKER TEMPERATURE DEPENDENT (THERMOSTAT)
	LIMIT SWITCH
	CONTACT NORMALLY OPEN WITH AUTOMATIC OVERCURRENT RELEASE
	CIRCUIT BREAKER
	ISOLATOR
	CONNECTING LINK

revision		issued	Allegretti		ABB	office resp	title LIST OF SYMBOLS
		check 1	Ehlen			ATPE	
		check 2					
		released	Gentner	der. from	repla.	repl.by	

NORNE 5044 | = | +

002 < > 006 | doc. | format A3 | lang. E | 3BHS233752E20 | page 005 | no. of pages

RELAY BREAKER COIL	
BISTABLE RELAIS BREAKER WITH INTERLOCK (MECHANIC OR MAGNETIC)	
RELAY ON DELAY	
RELAY OFF DELAY	
RELAY WIPING PULSE AT MAKE	
OVERCURRENT RELEASE MAGNETIC	
OVERCURRENT RELEASE THERMICAL	
UNDERVOLTAGE RELEASE	
ELECTRO-/MECHANICAL RELEASE	
MANUAL OPERATION	
V	VOLTMETER
A	AMPEREMETER
COS PHI	P.F.-METER

BREAKER COIL BREAKER COIL	
POTENTIAL TRANSFORMER TRANSFORMER 1-PHASE	
POTENTIAL TRANSFORMER TRANSFORMER 3-PHASE	
CURRENT TRANSFORMER	
CURRENT SENSOR	
G 3 ~	GENERATOR 3-PHASE
PMG 3 ~	GENERATOR PERMANENT MAGNET GENERATOR
M	MOTOR
	FAN FAN

POTENTIAL TRANSFORMER TRANSDUCER WITHOUT GALVANIC SEPARATION	
POTENTIAL TRANSFORMER TRANSDUCER WITH GALVANIC SEPARATION	
TRANSDUCER DC/DC	
TRANSDUCER AC, DC/DC WITH GALVANIC SEPARATION	
PULSE AMPLIFIER	
PULSE GENERATOR	
TRANSDUCER ANALOG/DIGITAL	
TRANSDUCER DIGITAL/ANALOG	
LOW PASS FILTER	
(EQUIVALENT REPRESENTATIONS)	
RECTIFIER	

&	AND-GATE
≥1	OR-GATE
=1	EXCLUSIVE OR-GATE
	INVERTED INPUT
	INVERTED OUTPUT
	SCHMITT-TRIGGER GATE
T 0	ON DELAY TRANSITION LOG 1/0 DELAYED DELAY TIME T
0 T	SWITCH OFF DELAY TRANSITION LOG 1/0 DELAYED DELAY TIME T
S R	SET/RESET FLIP-FLOP
	AMPLIFIER
	AMPLIFIER INVERTING
+ −	AMPLIFIER DIFFERENTIAL
	INTEGRATOR

revision							
	issued	Allegretti			office resp	title	
	check 1	Ehlen			ATPE	LIST OF SYMBOLS	
	check 2						
	released	Gentner	der. from	repla.	repl.by		

NORNE 5044

005 < > 010

doc. format A3 lang. E

3BHS233752E20

page 006 no. of pages

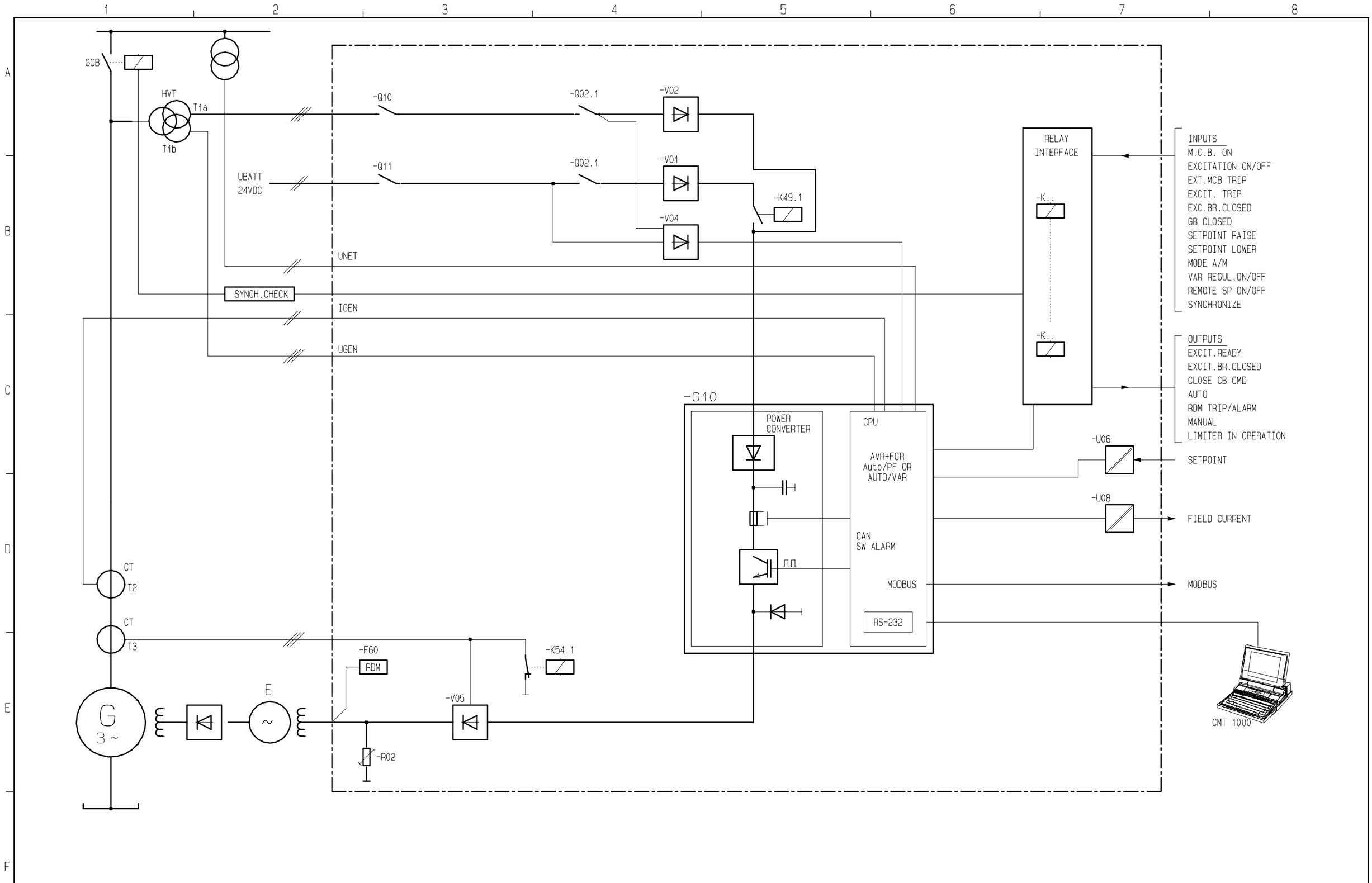

revision		issued	Allegretti			office resp	title
A		check 1	Ehlen			ATPE	BLOCK DIAGRAM
B		check 2					
		released	Gentner	der. from	repla.	repl.by	

NORNE 5044

006 < > 060

doc. format A3 lang. E

3BHS233752E20

page 010

no. of pages

DESIGNATION LOCATION	ITEM SPECIFICATION	ABB-TYPE NUMBER	SHEET
-F60	DIODE MONITORING DM-10	3BHE008619R0001	/220.E4
-G10	DIGITAL VOLTAGE REGULATOR UN 1000b-Z, V4 MIT RDM+ SYNC	3BHE014557R0006	/200.F3
-K02	RELAY 24VDC +3BHB002782R0001	3BHB002782R9024	/150.F7
-K10	RELAY 24VDC +3BHB002782R0001	3BHB002782R9024	/150.F1
-K37	RELAY 24VDC +3BHB002782R0001	3BHB002782R9024	/150.F6
-K39	RELAY 24VDC +3BHB002782R0001	3BHB002782R9024	/150.F8
-K41	RELAY 24VDC +3BHB002782R0001	3BHB002782R9024	/160.F2
-K42	RELAY 24VDC +3BHB002782R0001	3BHB002782R9024	/160.F3
-K44	RELAY 24VDC +3BHB002782R0001	3BHB002782R9024	/160.F4
-K49	RELAY 24VDC +3BHB002782R0001	3BHB002782R9024	/160.F6
-K51	RELAY 24VDC +3BHB002782R0001	3BHB002782R9024	/170.F1
-K54	RELAY 24VDC +3BHB002782R0001	3BHB002782R9024	/230.F2
-K55	RELAY 44.52.7.024 24VDC	3BHE007680R0001	/170.F8

DESIGNATION LOCATION	ITEM SPECIFICATION	ABB-TYPE NUMBER	SHEET
-K56	RELAY 24VDC +3BHB002782R0001	3BHB002782R9024	/170.F4
-K92	RELAY 44.52.7.024 24VDC	3BHE007680R0001	/170.F5
-K93	RELAY 24VDC +3BHB002782R0001	3BHB002782R9024	/170.F7
-K49.1	CONTACTOR TAL 26-30-10 17..32VDC 24VDC	1SBL243061R5110	/130.F2
-K54.1	CONTACTOR AL26-22-00 24VDC +1SBN010010R1010 +1SBN010010R1010	1SBL243501R8100	/230.F3
-Q10	M.C.B. S283 UC-K 16A +AUX.GHS2701916R0001	GHS2830164R0427	/120.F3
-Q11	M.C.B. S282 UC-K 10A +AUX.GHS2701916R0001	GHS2820164R0427	/130.F3
-Q02.1	CONTACTOR AL26-40-00 24VDC +1SBN010010R1010 +1SBN010010R1010	1SBL243201R8100	/150.F2
-Q02.2	ON-POSITION LATCH WB75A 24VDC	FPTN372726R1001	/150.D3
-Q02.11	VARISTOR RV5/50 24..50V U	1SBN050010R1000	/150.D2
-Q02.12	VARISTOR RV-BC6/60 24..60V U	GHV2501902R0002	/150.D3

DESIGNATION LOCATION	ITEM SPECIFICATION	ABB-TYPE NUMBER	SHEET
-R02	RESISTOR E441 V	GHE4410001R0001	/240.E4
-R49.1	VARISTOR RV5/50 24..50V U	1SBN050010R1000	/130.C5
-R54.1	VARISTOR RV5/50 24..50V U	1SBN050010R1000	/230.D4
-U06	UNIVERSAL TRANSDUCER SINEAX V604 UAUX24..60V AC/DC	3BHE007148R0002	/210.B2
-U08	UNIVERSAL TRANSDUCER SINEAX V604 UAUX24..60V AC/DC	3BHE007148R0002	/210.D4
-V01	DIODE BRIDGE 36MT120 35A 1200V	3BHE008164R0001	/130.B4
-V02	DIODE BRIDGE 36MT120 35A 1200V	3BHE008164R0001	/120.C6
-V04	DIODE BRIDGE 36MT120 35A 1200V	3BHE008164R0001	/130.E4
-V05	DIODE BRIDGE 36MT120 35A 1200V	3BHE008164R0001	/240.E3
-W04	DISTRIBUTOR 2x9x2,5mm2 +VDIG DGND	3BHB005849R0001	/200.F7
-W50	DISTRIBUTOR 1X9	3BHE013956R0001	/130.C7
-W51	DISTRIBUTOR 1X9	3BHE013956R0001	/130.D7

DESIGNATION LOCATION	ITEM SPECIFICATION	ABB-TYPE NUMBER	SHEET

revision							
A	issued	Allegretti					
	check 1	Ehlen					
	check 2						
	released	Gentner	der. from	repla.	repl.by		

ABB

office resp ATPE

title LIST OF COMPONENTS

NORNE 5044

060 < > 120

doc. format A3 lang. E

3BHS233752E20

page 061

no. of pages

CONVERTER SUPPLY	EXCITATION-BREAKER

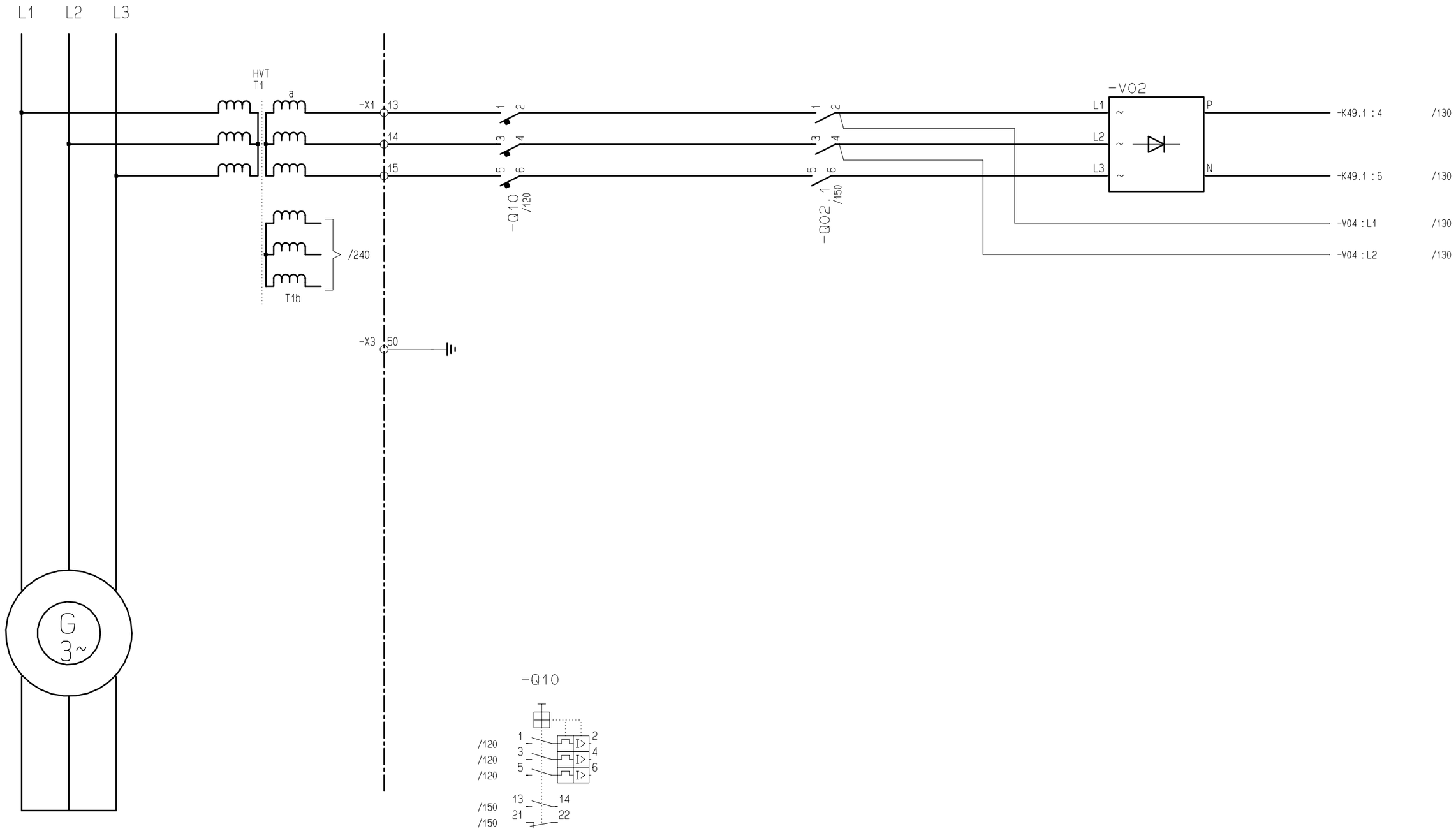

revision		issued	Allegretti
	B	check 1	Ehlen
		check 2	
		released	Gentner

der. from | repla. | repl.by

ABB

office resp: ATPE

title: CONVERTER SUPPLY & AC-SUPPLY

NORNE 5044

061 < > 130

doc. | format A3 | lang. E

3BHS233752E20

page 120 | no. of pages

DC-AUX SUPPLY	EXCITATION BREAKER		UG < 30%	

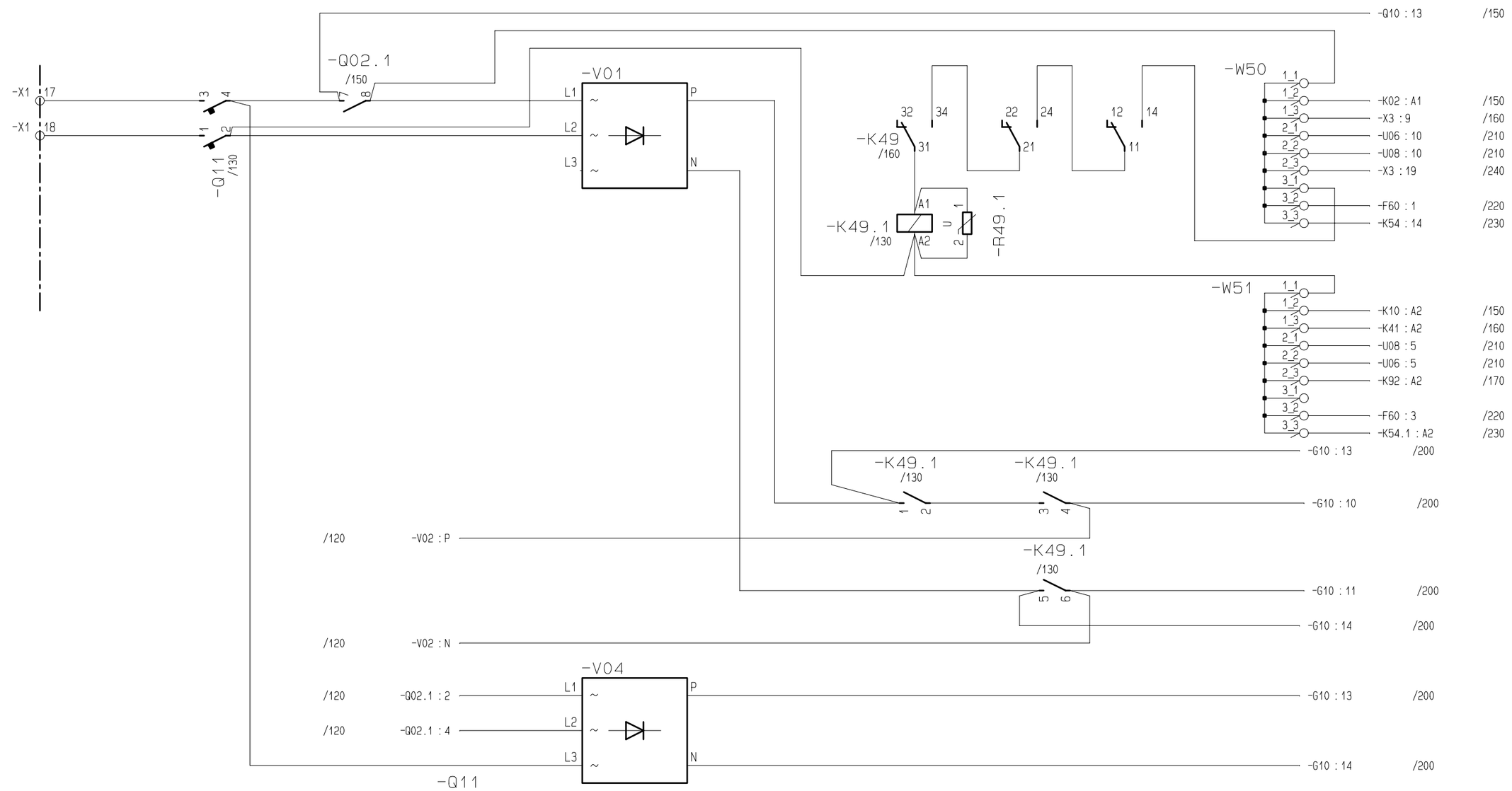

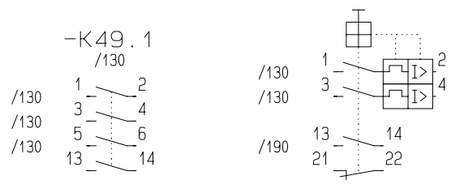

revision		issued	Allegretti			office resp	title
A		check 1	Ehlen		ABB	ATPE	DC-SUPPLY & AUX AC-SUPPLY
B		check 2					
		released	Gentner	der. from / repla.	repl.by		

NORNE 5044 = +

120 < | > 150

doc. | format A3 | lang. E

3BHS233752E20

page 130 | no. of pages

	MONITORING M.C.B.	EXCITATION ON	EXCITATION OFF		M.C.B. OFF	EXCITATION OFF	EXCITATION TRIP	EXCITATION BREAKER CLOSED	GENERATOR ON LINE (GB CLOSED STATUS)

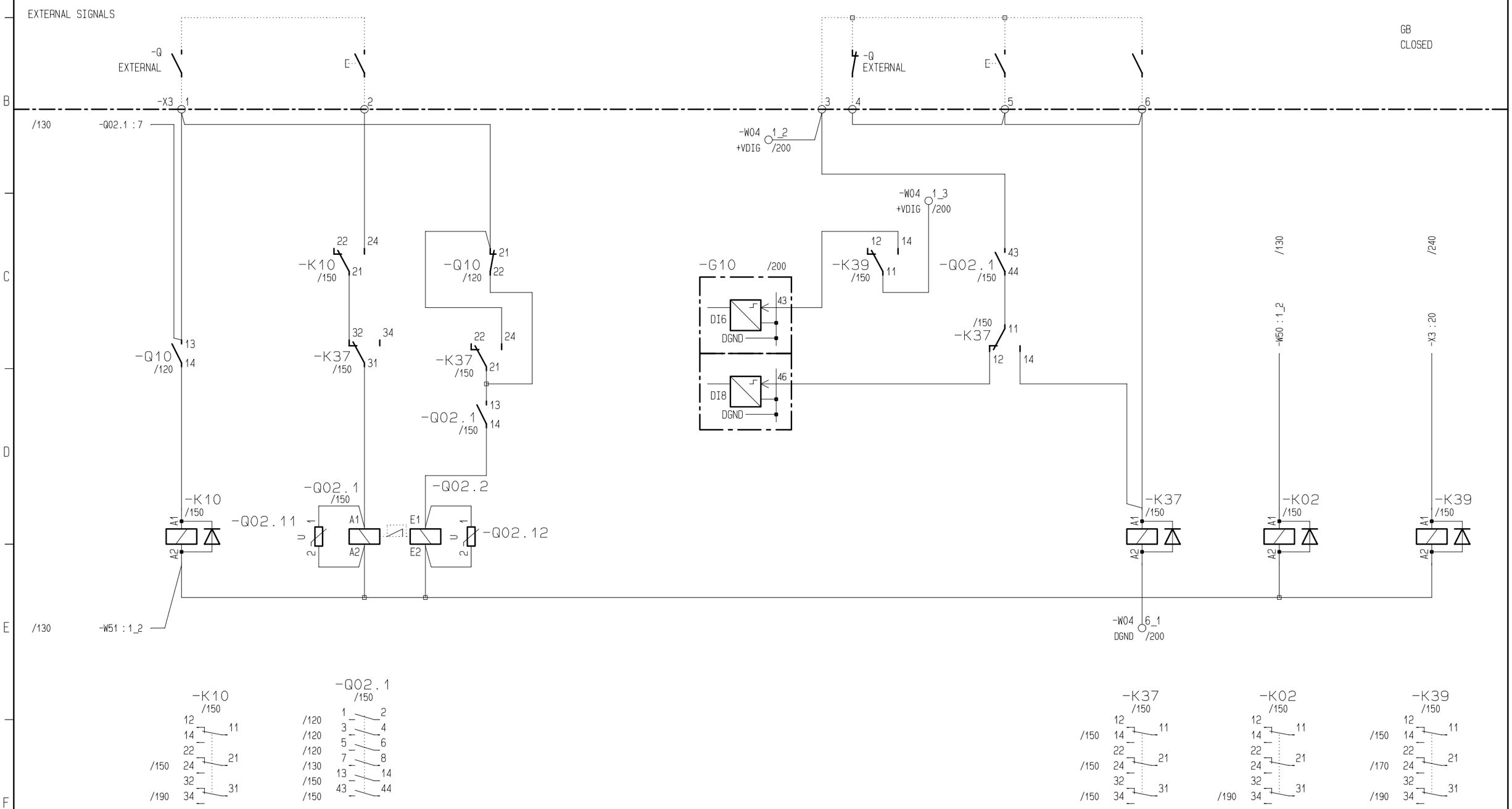

revision			issued	Allegretti				office resp	title
	A		check 1	Ehlen				ATPE	FCB CONTROL
	B		check 2						
			released	Gentner	der. from	repla.	repl.by		

NORNE 5044

130 < > 160

doc. format A3 lang. E

3BHS233752E20

page 150

no. of pages

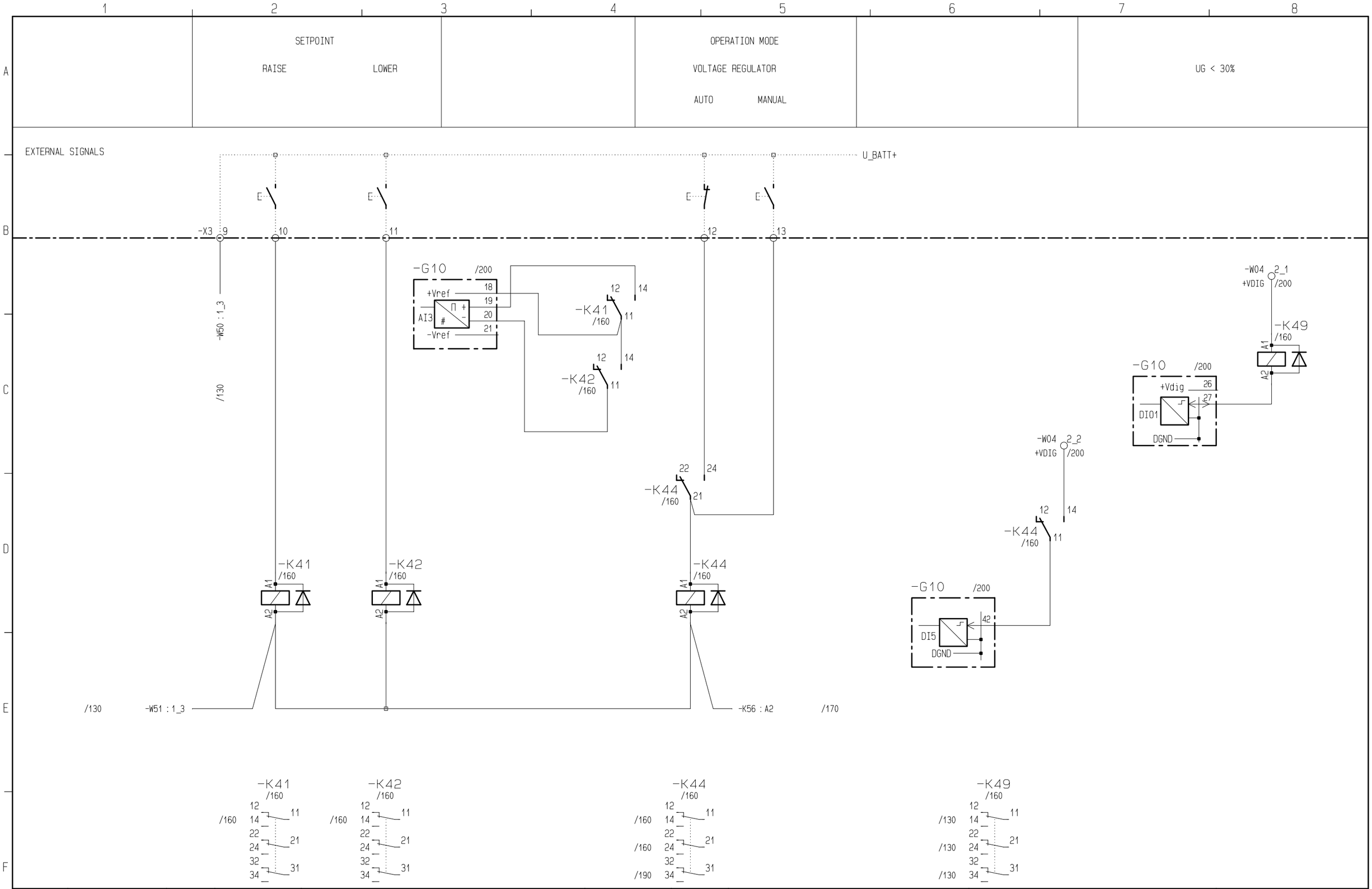

revision		issued	Allegretti			office resp	title
A		check 1	Ehlen			ATPE	CONTROL CIRCUITS
		check 2					
		released	Gentner	der. from	repla.	repl.by	

NORNE 5044

150 < > 170

doc. format A3 lang. E

3BHS233752E20

page 160 no. of pages

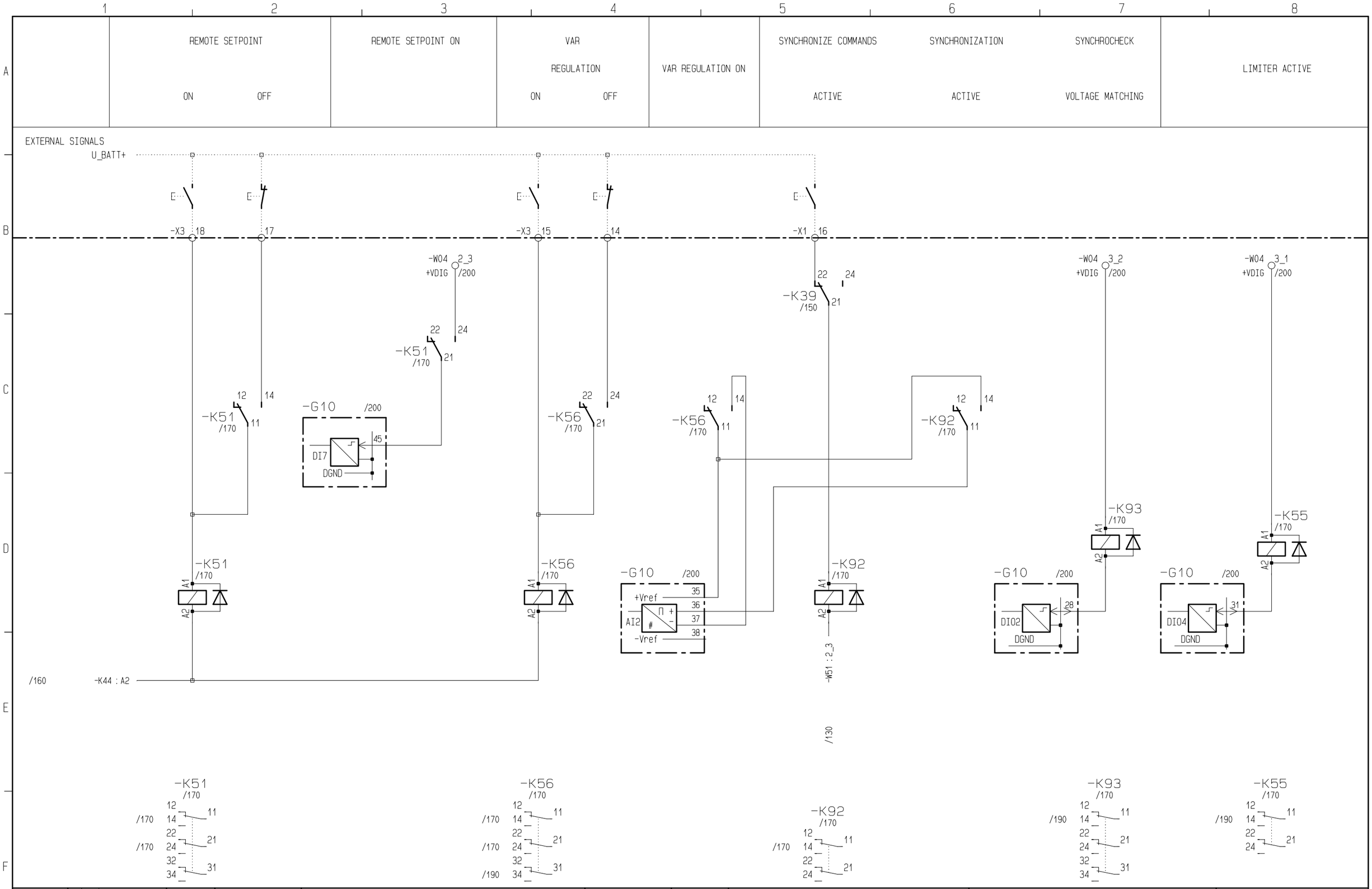

revision		issued	Allegretti				office resp	title
A		issued	Allegretti			ABB	ATPE	CONTROL CIRCUITS
B		check 1	Ehlen					
		check 2						
		released	Gentner	der. from	repla.	repl.by		

NORNE
5044

160 < > 190

doc. format A3 lang. E

3BHS233752E20

page 170

no. of pages

M.C.B. CLOSED (EXC.READY)	EXCITATION-BREAKER OPEN / CLOSED	GCB CLOSED CMD TO SYNCHROCHECKRELAY		AUTO	VAR REGULATION ON	MANUAL		LIMITER IN OPERATION

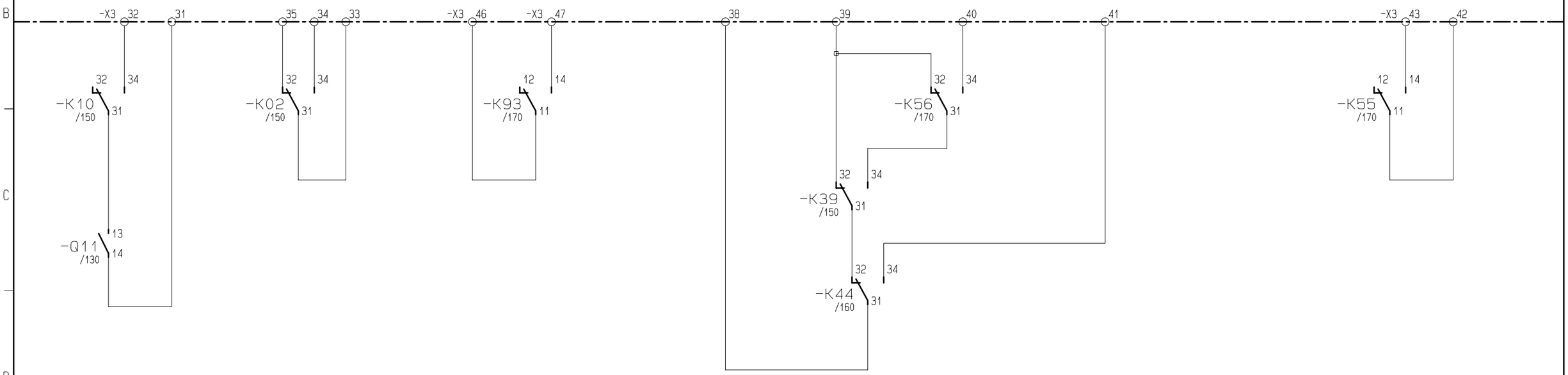

revision			issued	Allegretti				office resp	title
	A		check 1	Ehlen				ATPE	CONTROL CIRCUITS FEEDBACK
	B		check 2						
			released	Gentner	der. from	repla.	repl.by		

NORNE 5044 = +

170 < > 200

doc. format A3 lang. E

3BHS233752E20

page 190 no. of pages

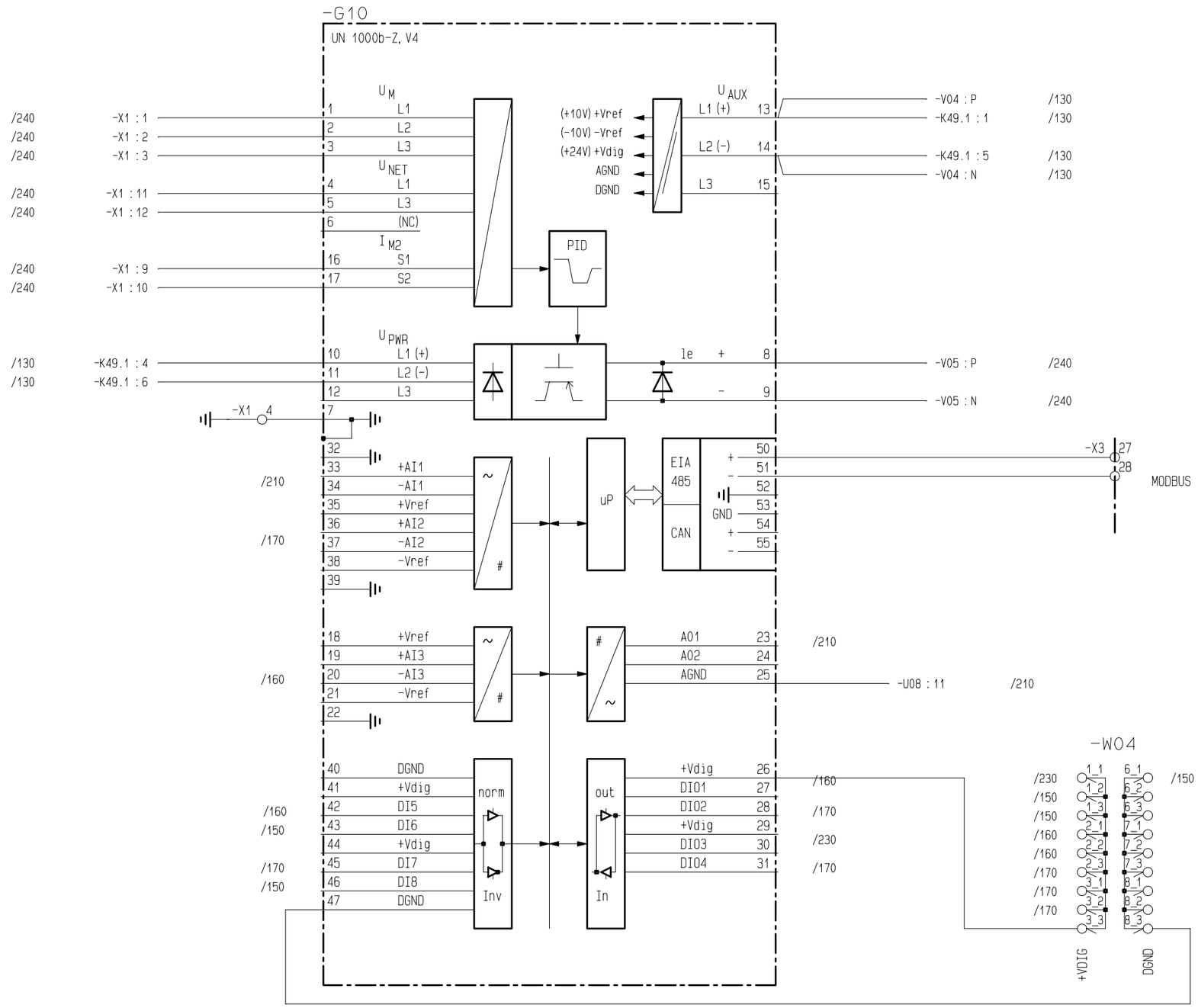

revision	issued	Allegretti	office resp	title
B	check 1	Ehlen	ATPE	AVR
	check 2			
	released	Gentner		

der. from | repla. | repl.by

NORNE 5044 | = | +

190 < | > 210

doc. | format A3 | lang. E

3BHS233752E20

page 200 | no. of pages

ANALOG- INPUT	ANALOG- OUTPUT

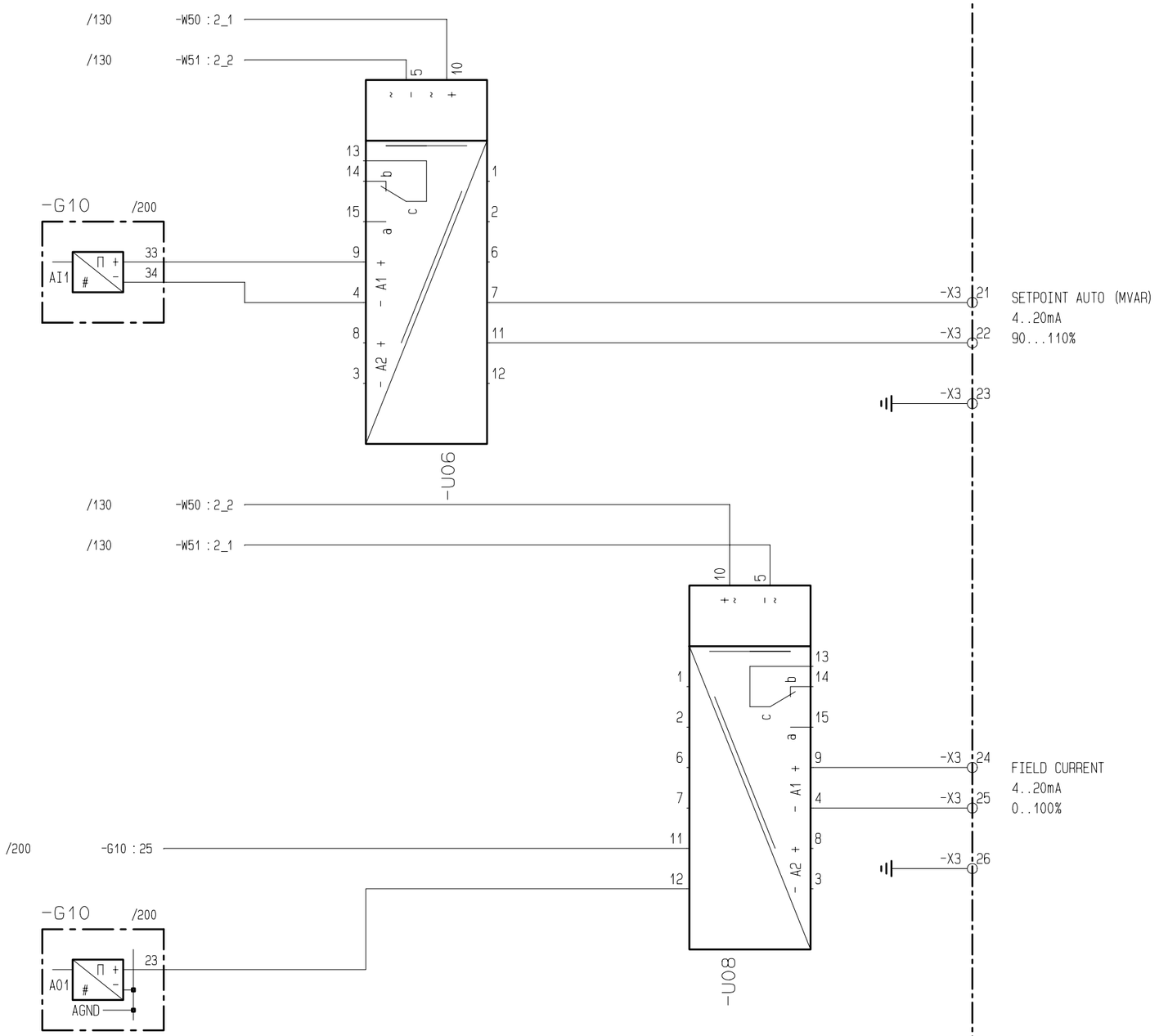

revision			issued	Allegretti				office resp	title
	A		check 1	Ehlen			ABB	ATPE	ANALOGUE IN/OUTPUTS
	B		check 2						
			released	Gentner	der. from	repla.	repl.by		

NORNE 5044

200 < > 220

doc. format A3 lang. E

3BHS233752E20

page 210 no. of pages

DC-AUX-SUPPLY	EXC.CURRENT	DIODE OPEN	DIODE SHORTED

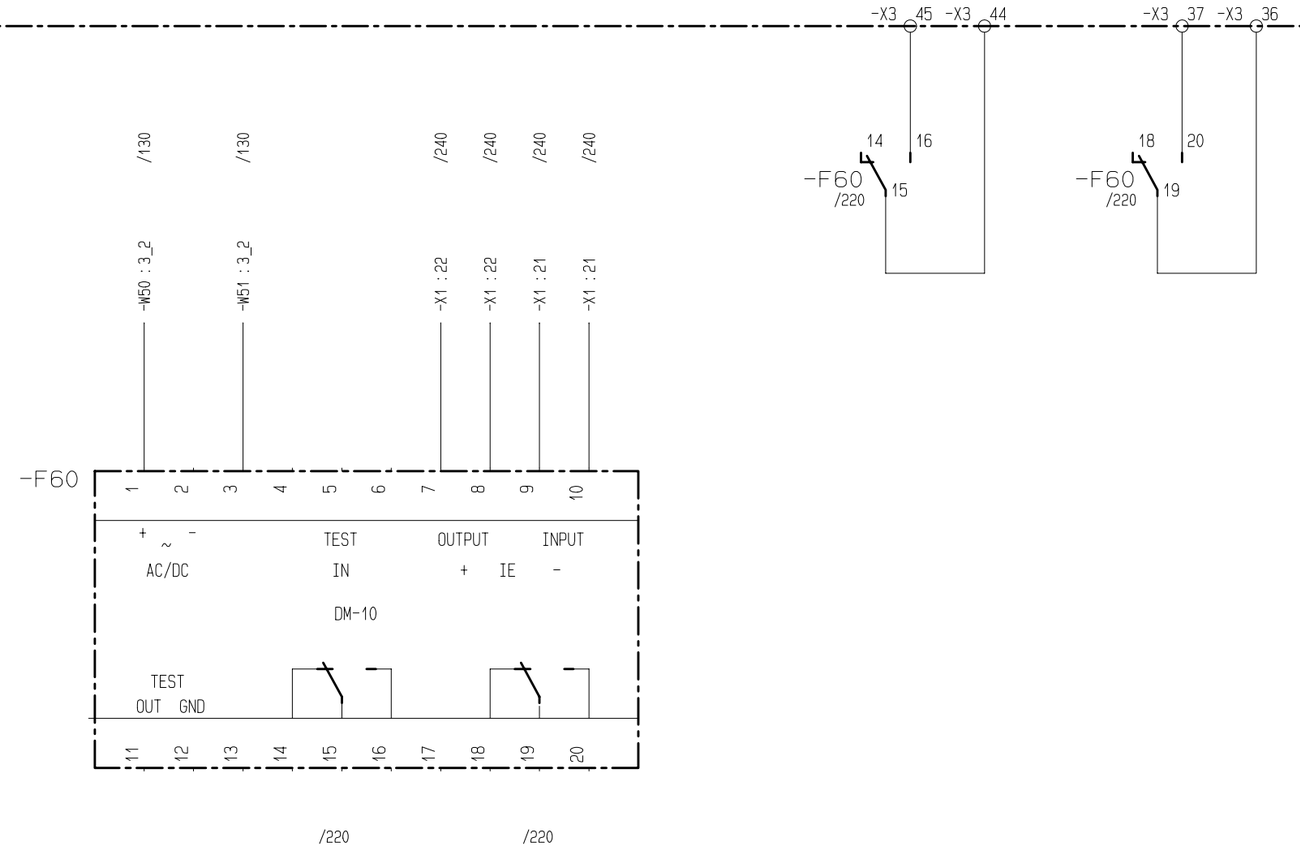

revision		issued	Allegretti			office resp	title
B		check 1	Ehlen			ATPE	CONTROL CIRCUITS
		check 2					
		released	Gentner	der. from	repla.	repl.by	

NORNE 5044 | = | +

210 < > 230

doc. | format A3 | lang. E | 3BHS233752E20 | page 220 | no. of pages

BOOST

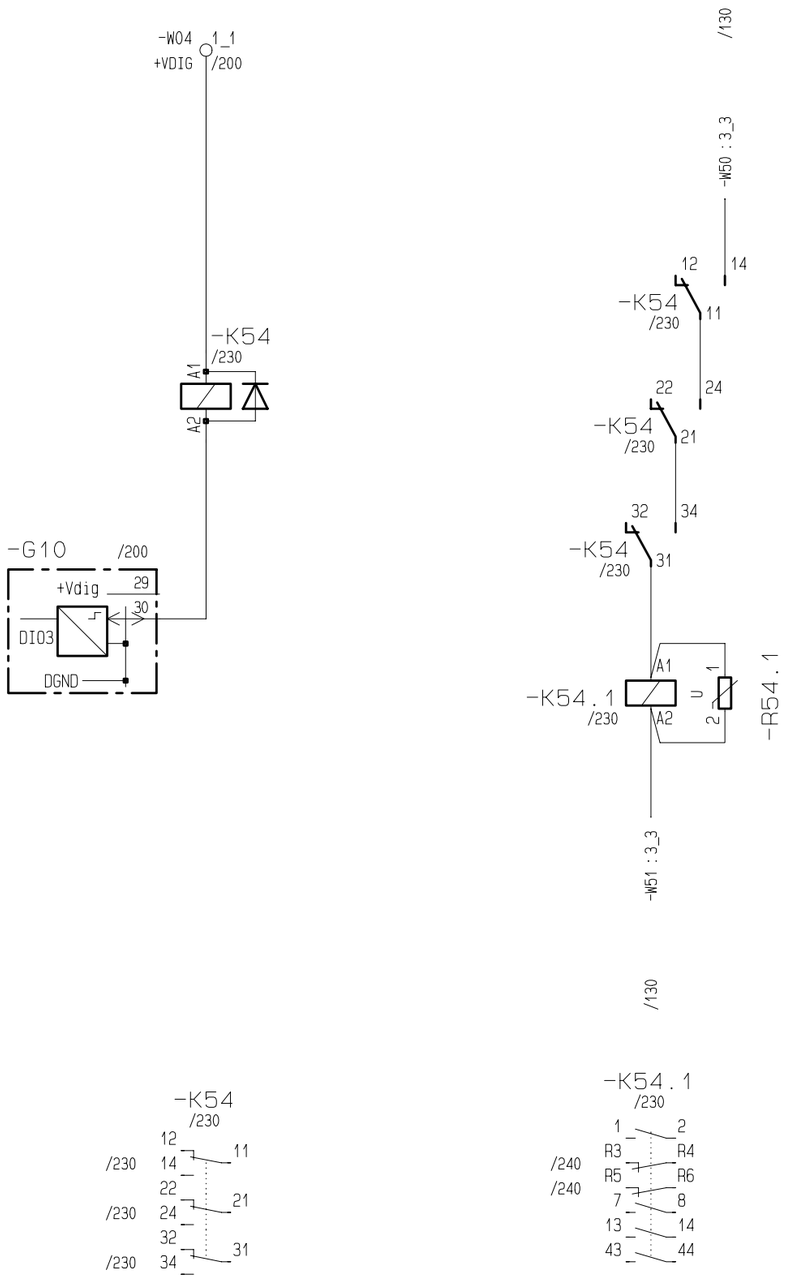

revision													
	A		issued	Allegretti			ABB	office resp	title	NORNE 5044	=		
			check 1	Ehlen				ATPE	BOOST		+		
			check 2							220 <	> 240		
			released	Gentner	der. from	repla.	repl.by			doc.	format A3	lang. E	3BHS233752E20	page 230	no. of pages

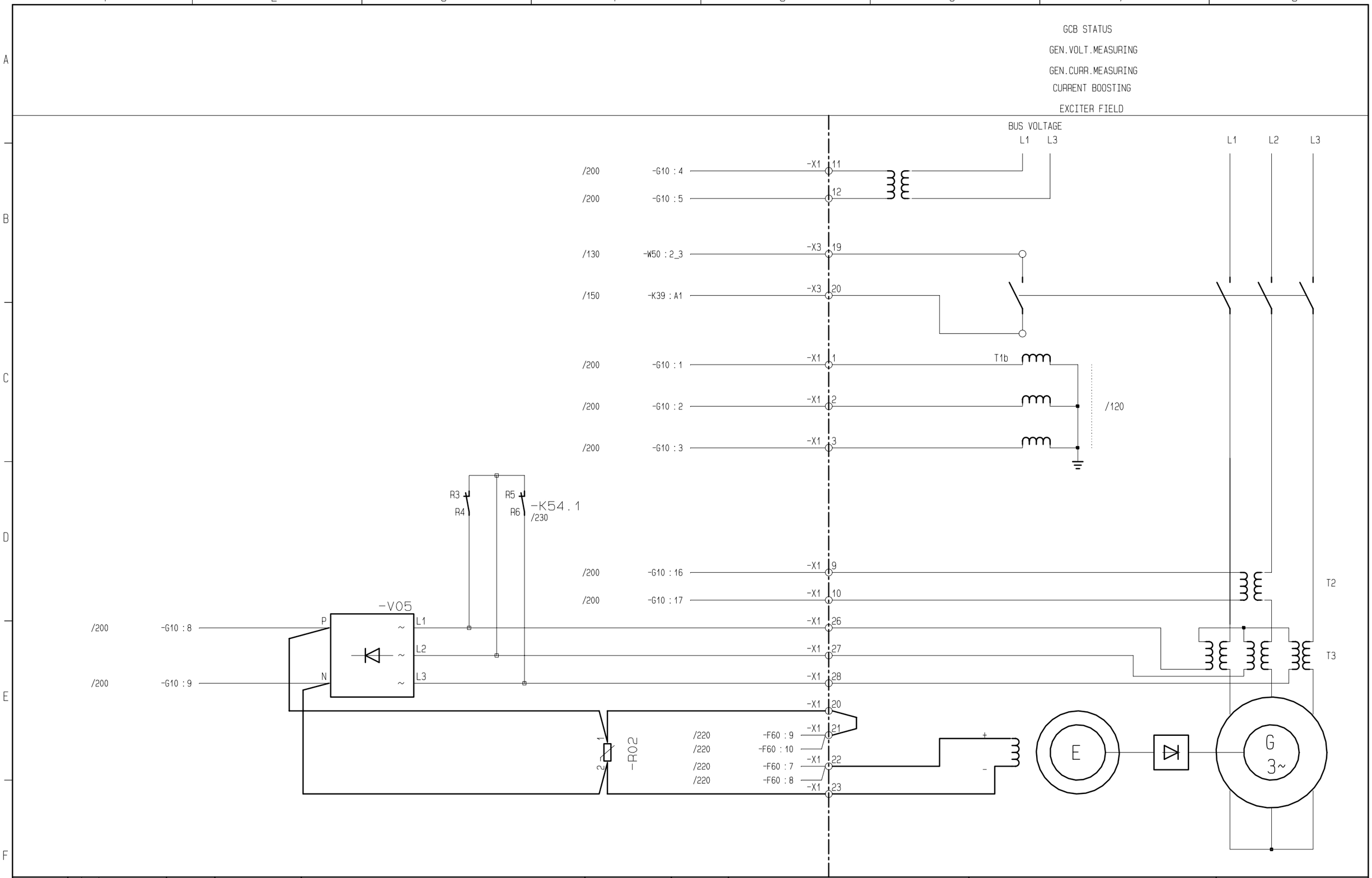

revision			issued	Allegretti			office resp	title
	A		check 1	Ehlen			ATPE	DC-OUTPUT
	B		check 2					
			released	Gentner	der. from	repla.	repl.by	

NORNE 5044

230 < > 900

doc. format A3 lang. E

3BHS233752E20

page 240 no. of pages

-W100

INTERFACE				SIGNAL DESIGNATION	SIGNAL DESCRIPTION		DATA
/240	-X1	1	L1		GEN.VOLTAGE MEASURING	PT1	11kV/110V
/240		2	L2			PT2	2VA
/240		3	L3			PT3	
/200		4	GND				
		5					
	-X1	6					
		7					
		8					
/240		9	k		GEN.CURRENT MEASURING	CT	300/1A
/240		10	l				10VA cl.3
/240	-X1	11	L1		NET.VOLTAGE		11kV/110V
/240		12	L3				
/120		13	L1		SHUNT SUPPLY		
/120		14	L2		CONVERTER		3x110VAC
/120		15	L3				50Hz, 3200VA
/170	-X1	16	GND				
/130		17	+		DC AUX.POWER SUPPLY		24V DC
/130		18	-				10A
		19	GND				
/240		20					
/240	-X1	21			GENERATOR FIELD		IEN=6, 7ADC
/240		22	+				Upl=104VDC
/240		23	-				
		24	GND				
		25					
/240	-X1	26	L1		BOOSTING		.....
/240		27	L2				
/240		28	L3				
		29					
		30					
	-X1	31					
		32					
		33					
		34					
		35					
	-X1	36					
		37					
		38					
		39					
		40					

INTERFACE				SIGNAL DESIGNATION	SIGNAL DESCRIPTION		DATA
/150	-X3	1				COM	24VDC
/150		2			EXCIT.ON	CMD	
/150		3				COM	24VDC
/150		4			EXT.MCB	OFF	30mA
/150		5			EXCIT.	OFF	
/150	-X3	6			EXCIT.	TRIP	
		7					
		8					
/160		9				COM	24VDC
/160		10			SETPOINT	RAISE	
/160	-X3	11				LOWER	
/160		12			AUTO	ON	
/160		13			MANUAL	OFF	
/170		14			VAR.REGUL.	OFF	24VDC
/170		15				ON	
	-X3	16			SYNCHRONIZATION	ACTIVE	
/170		17				ON	
/170		18			REMOTE SETPOINT	OFF	
/240		19				COM	24VDC
/240		20			GEN.BREAKER	CLOSED	
/210	-X3	21			ANALOG INPUT		4..20mA
/210		22			SETPOINT	AUTO	90..110%
/210		23	GND				
/210		24			ANALOG OUT		4..20mA
/210		25			FIELD CURRENT		0..100%
/210	-X3	26	GND				
/200		27	-		MODBUS		
/200		28	+				
		29	SCR				
		30	GND				
/190	-X3	31	+			COM	≤ 250VAC DC
/190		32			EXCIT.	READY	≤ 50W*
/190		33	+			COM	≤ 250VAC DC
/190		34			EXCIT.BREAKER	CLOSED	≤ 50W*
/190		35				OPEN	
/220	-X3	36	+		RDM	COM	≤ 250VAC DC
/220		37			DIODE SHORTED	TRIP	≤ 25W*
/190		38	+			COM	≤ 250VAC DC
/190		39			AUTO	ON	≤ 50W*
/190		40			VAR.REGULATION	ON	
/190	-X3	41			MANUAL	ON	
/190		42	+			COM	≤ 250VAC DC
/190		43			LIMITER	IN OPERATION	≤ 50W*
/220		44	+		RDM		≤ 250VAC DC
/220		45			DIODE OPEN	ALARM	≤ 50W*
/190	-X3	46	+		SYNCHROCHECK	COM	≤ 250VAC DC
/190		47				ON	≤ 50W*
		48					
		49					
/120		50	GND		GROUND MOUNTING PLATE		

10mm2 PHÖNIX TYP URTK/S -X1: 1-3, 5-15, 17, 18, 20-23, 25-40
4mm2 PHÖNIX TYP UK5N -X3: 1-22, 24-25, 27-29, 31-49
4mm2 PHÖNIX TYP USLKG5 -X1: 4, 16, 19, 24/ -X3: 23, 26, 30
6mm2 PHÖNIX TYP USLKG10 -X3: 50

TERMINALS W/O INTERNAL CROSS REF. ARE SPARE TERMINALS

* L/R ≥ 40MS

JUMPER PHOENIX FBI 10_6

revision		issued	Allegretti	office resp	title
A		check 1	Ehlen	ATPE	LIST OF TERMINALS
B		check 2			
		released	Gentner	der. from / repla. / repl.by	

NORNE 5044 = +

240 < >

doc. format A3 lang. E

3BHS233752E20

page 900 no. of pages