A WIRTGEN GROUP COMPANY

VÖGELE

Highway Class

SUPER 1900-3i

TRACKED PAVER

PREMIUM LINE

Maximum pave width 11m
Maximum laydown rate 900t/h
Transport width 2.55m

www.voegele.info

Powerful, efficient and economical

The tracked SUPER 1900-3i is a model of the modern VÖGELE "Dash 3" paver generation. The machine features a unique design as well as ergonomic operating comfort and high performance with minimum consumption.

When developing this road paver, a special focus was on ergonomic, economic and ecological aspects. The VÖGELE EcoPlus package, for instance, significantly reduces both fuel consumption and noise levels.

The VÖGELE ErgoPlus 3 operating system has been provided with a number of additional ergonomic and functional features for the "Dash 3" generation. The paver operator's console, for example, comes with a large colour display, ensuring brilliant readability even in poor lighting conditions.

In addition, the convenience functions AutoSet Plus and PaveDock Assistant make work with the SUPER 1900-3i even easier.

The SUPER 1900-3i is a powerful paver excellently suited for many different applications up to a maximum pave width of 11m.

The highlights of the SUPER 1900-3i

Tracked Highway Class paver with a large range of applications and pave widths up to 11m

Powerful and economical drive concept, even when operating at full load in any climate zone

The VÖGELE EcoPlus low-emissions package significantly reduces fuel consumption and noise levels

Optimum feeding with mix thanks to the large material hopper, PaveDock sprung push-rollers and PaveDock Assistant communication system

ErgoPlus 3 operating system with numerous convenient and automatic functions

All screeds can be used with high-compaction technology

Efficient high performance with low consumption

The powerful 6-cylinder diesel engine rated at 142kW is the driving force behind this Highway Class paver.

Intelligent engine management with ECO mode and VÖGELE EcoPlus low-emissions package keep fuel consumption and noise levels low.

Low input – maximum output: all drive components including the three-phase A.C. generator are powered via the central splitter gearbox and operate with maximum efficiency.

Crawler tracks with high tractive power efficiently translate the engine output into pave speed.

Future-proof drive technology

Three main components form the power unit of a SUPER 1900-3i: its modern, liquid-cooled diesel engine, a splitter gearbox flanged directly to the engine and a large cooler assembly.

The driving force behind this VÖGELE powerhouse is its diesel engine. The 6-cylinder engine delivers 142kW at 2,000rpm. Yet the fuel-saving ECO mode is sufficient for many applications. And even then, the SUPER 1900-3i still has a full 137kW at its disposal. Moreover, the machine generates operates particularly quietly when running at just 1,700rpm.

A large cooler assembly ensures that the power unit always delivers its full output. With innovative air routing and a variable-speed fan, temperatures are always maintained within the optimum range, significantly extending the service life of both the diesel engine and the hydraulic oil. Another advantage is that the machine can be operated without difficulty in all climatic regions around the world.

All hydraulic consumers are directly supplied with hydraulic oil via the splitter gearbox. The advantage is that all hydraulic pumps and valves are centrally located, making them easily accessible for servicing. Even the powerful generator for screed heating is flanged directly onto the splitter gearbox; its integrated oil cooling system makes it completely maintenance-free and very quiet.

The power unit of the SUPER 1900-3i with diesel oxidation catalyst (DOC) and selective catalytic reduction (SCR) for exhaust gas after-treatment complies with the strict requirements of European exhaust emissions standard Stage 4 and US EPA standard Tier 4f.

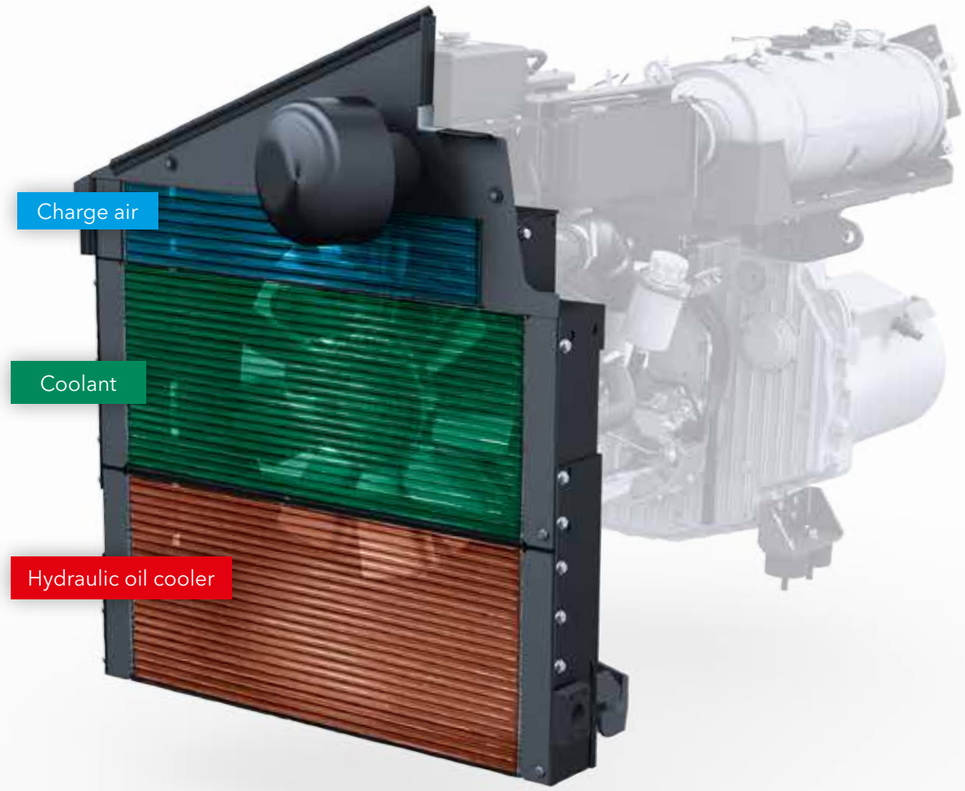

The large cooler assembly is made up of three parts. It ensures that engine coolant, charge air and hydraulic oil are maintained at the optimum temperature.

» **Machines with the suffix "i"** in their product designation are not only economical, but also extremely clean.

The "i" stands for "intelligent emission control" and is found in the type names of all machines from the WIRTGEN GROUP equipped with the latest engine technology. These engines comply with the strict standards of the current exhaust emission legislation.

» **Powerful yet economical** 6-cylinder diesel engine with ECO mode.

» **ECO mode for paver operation** at 1,700rpm is not only perfectly adequate for numerous applications, it also cuts operating costs and allows super-quiet operation.

» **A powerful, oil-cooled generator** with direct drive ensures rapid, uniform heating of the screed. In the "Dash 3" generation, the generator is directly driven by the splitter gearbox and therefore maintenance-free.

VÖGELE EcoPlus: Less is more

It goes without saying that our road pavers conform to the applicable emissions directives, but we like to go much further. That's why the machine concept of the "Dash 3" generation uses environmentally friendly innovations in machine technology, resulting in lower consumption, lower emissions and lower costs.

One of these innovations is the VÖGELE EcoPlus low-emissions package. Fuel savings of up to 25% can be achieved with VÖGELE EcoPlus, depending on the application and capacity utilization of the paver.

That doesn't just result in considerable savings for the contractor – it is good news for the environment, too. That's because every litre of fuel saved reduces carbon dioxide (CO_2) emissions.

25% FUEL SAVING

25% LESS CO_2 EMITTED

LOWER NOISE EMISSIONS

The technical innovations

01

Splitter gearbox with ability to disengage hydraulic pumps

When the paver is stationary, all the hydraulic pumps needed for "traction", "conveyors and augers" and "compaction" are disengaged automatically. The result? Lower fuel consumption.

02

Energy-optimized tamper drive

The tamper is driven by a variable-displacement pump which always delivers exactly the amount of oil needed for the current tamper speed and not a drop more or less.

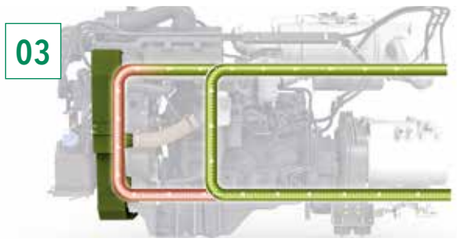

03

Controlled hydraulic oil temperature circuit

A bypass circuit gets the hydraulic oil to its optimum operating temperature very quickly, enabling rapid, fuel-saving operation of the paver.

04

Variable-speed fan

The variable-speed fan automatically adapts to the engine load and the ambient temperature. This type of drive saves energy and reduces noise emissions.

Efficient transmission of engine power

High-quality separate hydraulic drives are essential components of the VÖGELE drive concept. They allow our pavers to operate outstandingly and therefore extremely cost-efficiently.

Since the traction drive units are directly integrated into the sprockets of the crawler tracks, engine output is translated into pave speed without any loss of power.

» **The hydraulic systems** for the traction drive, conveyors and augers as well as the compacting systems all operate in separate closed circuits for maximum efficiency.

» **Long crawler tracks** deliver maximum traction thanks to their large footprint. This ensures a constant forward speed even when operating on difficult terrain.

» **Positive tracking** when moving straight and accurate cornering due to electronically controlled separate drives provided for both crawler tracks.

» **The sturdy deflectors** in front of the crawler tracks reliably clear any spilled mix out of the way. With the AutoSet Plus option, the deflectors in front of the crawler tracks can even be raised and lowered hydraulically.

Top-quality paving thanks to perfect material management

A continuous flow of mix is key to ensuring uninterrupted and high-quality paving. That is why we attach such importance to professional material management when designing our pavers.

All our development efforts focus on simple operation and the best possible overview for the paving team.

VÖGELE's PaveDock Assistant is an innovative solution standardizing and simplifying communication between the paver operator and driver of the feed vehicle.

Large material hopper

As with all VÖGELE pavers, supplying the SUPER 1900-3i with mix is a clean, safe and swift process.

Thanks to a hydraulically operated hopper front (option), the mix inside the material hopper is directed right onto the conveyors and the entire mix properly conveyed in front of the screed.

- **The large material hopper** has a capacity of 14 tonnes so that a sufficient quantity of mix is available for paving at all times, even in situations where feeding is difficult, such as when paving under bridges.
- **Easy feeding with mix** thanks to low material hopper, wide hopper sides and sturdy rubber baffles fitted to the hopper front.
- **Especially large oscillating push-rollers** for convenient and shock-free docking of feed vehicles even on bends.
- **The oscillating push-rollers** can be displaced forwards by 75 or 150mm to cater to the most diverse feed vehicles.

Precise spreading of mix across the full pave width

The augers of the SUPER 1900-3i are hydraulically infinitely variable in height up to 15cm, even while paving.

This provides for quick and easy adaptation to the desired layer thickness across the full pave width.

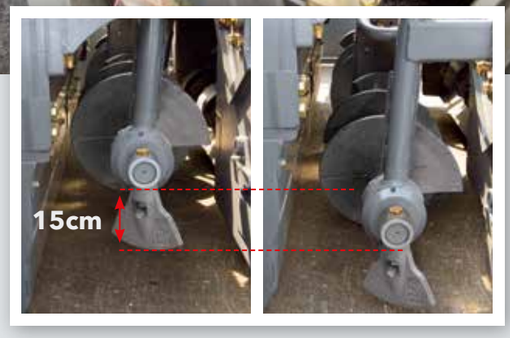

The height of the augers complete with bearing boxes and limiting plates for the auger tunnel can be hydraulically adjusted by up to 15cm across the full pave width. This optimizes the head of mix in front of the screed, even when paving thin layers or when layer thickness varies.

- **Powerful, separate hydraulic drives** are provided for conveyors and augers, permitting high laydown rates up to 900 tonnes per hour.
- **Large auger blades** (diameter 400mm) provide for an optimal head of mix in front of the screed and prevent segregation, even when paving across large widths.
- **Hydraulic height-adjustment** of the augers, complete with bearing boxes and limiting plates for the auger tunnel allows the paver to be moved on the job site without a need for conversion, a benefit that saves time and money.

PaveDock Assistant:
The communication system

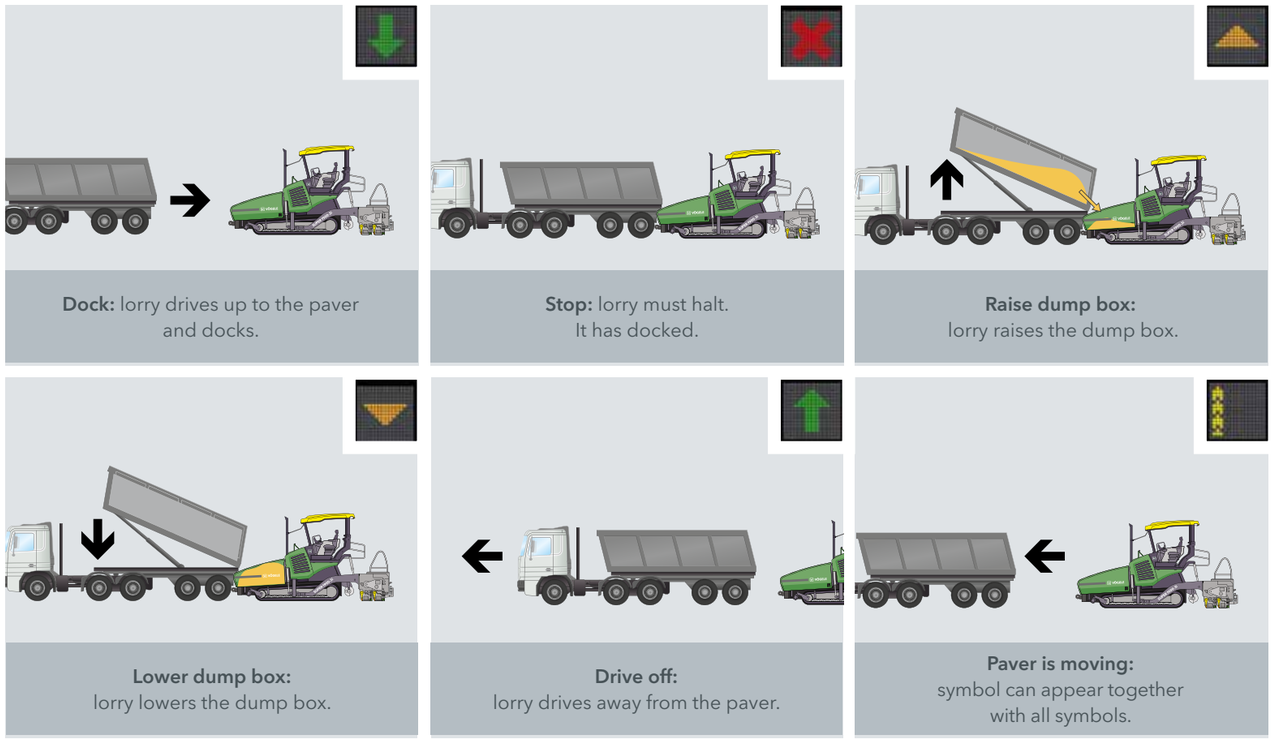

PaveDock Assistant is the communication system between the paver operator and the driver of the feed vehicle. It allows particularly fast and reliable transfer of mix to the paver. Signal lights on the paver and the associated controls on the paver operator's ErgoPlus 3 console are key components.

The paver has two sets of signal lights, mounted on the right and left of the hardtop. With these lights, the paver operator can give the driver of the feed vehicle unmistakable signals, indicating what needs to be done (e.g. reverse, stop, dump mix). Having two lights, each in an elevated position, ensures that all signals are clearly visible to the feed vehicle driver from all angles of approach.

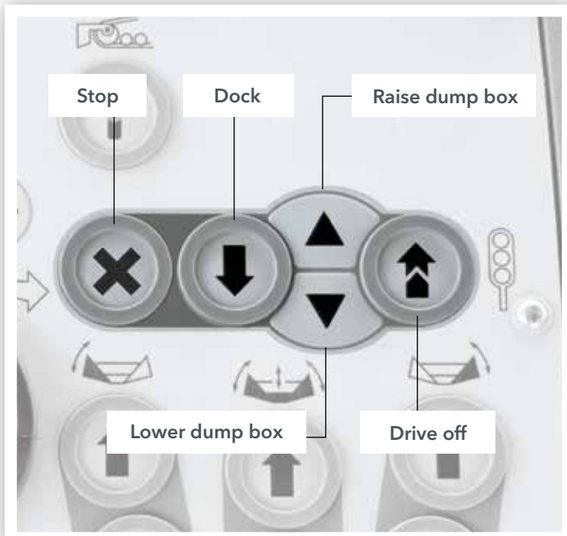

PaveDock dampens impacts effectively

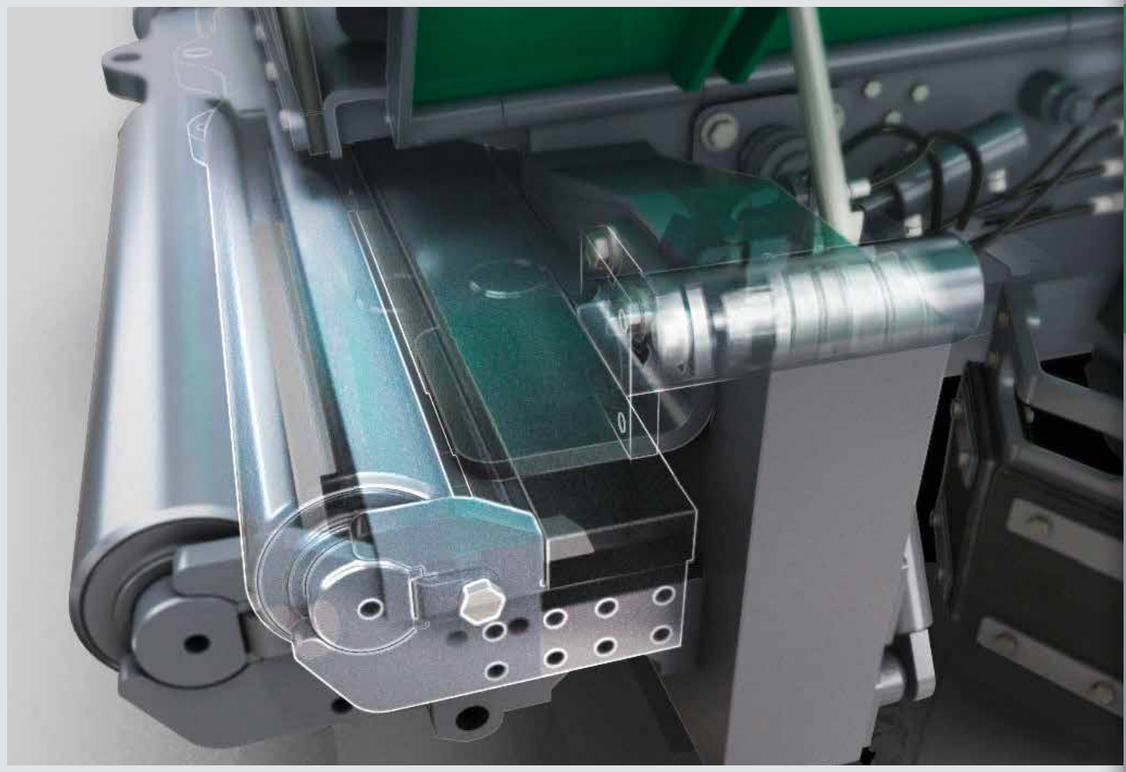

As an alternative to the oscillating push-rollers, VÖGELE also supply PaveDock sprung push-rollers. These absorb jolts by the feed vehicle even more effectively and reliably, thus ensuring that they are not transmitted to the finished pavement.

Together with the PaveDock Assistant, the sprung push-rollers maximize process safety during transfer of the mix: a sensor installed in the sprung push-rollers indicates whenever a feed vehicle has docked onto the paver. The signal lights display the stop signal automatically and directly. The feed vehicle driver can thus react immediately.

Automated processes with AutoSet Plus

With AutoSet Plus, we have enhanced the efficiency, convenience and quality of key job site processes. AutoSet Plus has two handy automatic functions.

The Repositioning and Transport function greatly facilitates the continuation of work when moving the paver on the job site from one work section to another, or after the paver has been transported.

Simply pressing the "Execute" button quickly and reliably readies the machine for travel on the job site, or for transport. Pressing the button again returns it to the previously stored working position.

The Paving Programs function allows the operating personnel to save the configured machine parameters and store these as a paving program in the menu. This program can then be called up and used whenever needed.

The two comfort functions of AutoSet Plus automate routine tasks, allowing work processes to be carried out more quickly and with greater control. This in turn means that construction projects can be completed faster and more reliably.

1 // AutoSet Plus – Repositioning function

Fast and safe repositioning of the paver on the job site.

No settings are lost between paving and repositioning.

Also prevents any damage to the augers and deflectors in front of the crawler tracks.

2 // AutoSet Plus – Paving Programs function

Automated configuration of the paver.

Stores all paving-relevant parameters.

Selection of stored paving programs.

Reproducible quality.

AutoSet Plus
Repositioning function

AutoSet Plus is especially helpful when the machine frequently has to be moved on the job site.

Simply pressing the “Execute” button raises the augers, the hydraulically operated hopper front and the deflectors in front of the crawler tracks to the uppermost positions. The screed and the screed tow point rams are brought into transport position. In addition, the screed is locked hydraulically in transport position. The conveyors are temporarily reversed, preventing mix from falling to the ground when the paver travels to the next work section on site.

Once the paver has been repositioned, pressing the “Execute” button again returns all systems to the previously stored working positions.

This ensures that no settings are lost when changing from paving to repositioning or transport. It also effectively prevents any damage to the machine.

1. **The AutoSet Plus Repositioning function** is activated just by pushing the “Execute” button.
2. **Raise/lower** screed.
3. **Lock/unlock** screed.
4. **Screed tow point rams** in transport position/at last set value.
5. **Raise/lower** augers.
6. **Conveyor movement** reversible for a short time.
7. **Raise/lower** deflectors in front of the crawler tracks.
8. **Raise** hopper front.

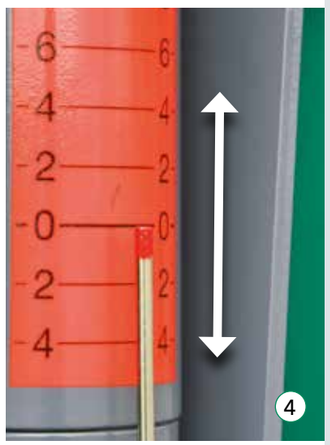

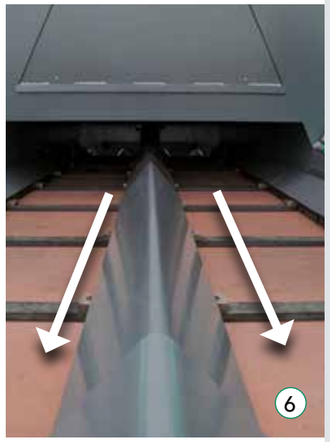

AutoSet Plus
Paving Programs

The automatic Paving Programs function allows the operating personnel to store their own paving programs. All key parameters for paving a specific layer (example: base course of asphaltic concrete, 18cm thick) can thus be saved.

On the display of his console, the paver operator saves the values set for the compacting systems (tamper and vibrator speed, pressure for the pressure bars), height of the augers, position of the tow point rams, pressure for Screed Assist and the pave speed in his program.

He also enters the amount of crown and the screed temperature. The program is completed with additional information on the material being used, the layer thickness and the pave width.

The stored paving programs can subsequently be selected and used at any time via the menu. In the event of a repeat situation, this ensures that work is carried out with exactly the same settings while maintaining a consistent quality.

SUPER 1900-3i

The ErgoPlus 3 operating concept

Even the very best machine with the most advanced technology can only really show its strengths if it can be operated easily and as intuitively as possible. At the same time, it should offer an ergonomic and safe working environment for the operating team. Therefore, the ErgoPlus 3 operating concept focuses on the operator. With VÖGELE pavers, the user consequently retains full control over the machine and construction project.

On the following pages example illustrations will provide you with more detailed information on the extensive functions of the ErgoPlus 3 operating concept. ErgoPlus 3 encompasses the operator's stand, the paver and screed operator's consoles and Niveltronic Plus, the System for Automated Grade and Slope Control.

The paver operator's **ErgoPlus 3** console

"Full control for the machine operator!"

The paver operator's ErgoPlus 3 console

The paver operator's console is extremely clear and has been designed according to practical principles. All functions are combined into logical groups, so that the operator finds each function exactly where he would expect it to be.

On the ErgoPlus 3 console, all push-buttons are easily identifiable by touch even when wearing work gloves. Once a button is pressed, off you go thanks to the "Touch and Work" principle. This means that a function is executed directly – without a need to confirm.

- **Module 1:** Conveyors and augers, traction
- **Module 2:** Screed
- **Module 3:** Material hopper and steering
- **Module 4:** Display for monitoring and adjustment of basic settings

No-load function

The no-load function is provided for the warm-up or cleaning of conveyors, augers and tamper.

Reversing conveyor movement

In order to avoid mix dropping from the conveyors during a move of the paver on the job site, for instance at the end of a section, conveyor movement can be reversed at the push of a button. The conveyors are reversed for a short time only and stopped automatically.

AutoSet Plus Repositioning function (option)

With the AutoSet Plus Repositioning function, the paver is quickly and safely prepared for a move on the job site at the push of a button. After the move, all paver components are reset to their previous working positions, simply by pressing the button again. This ensures that no settings are lost when changing between "Pave" and "Job Site" modes. AutoSet Plus also effectively prevents damage during transport.

Choice of operating modes for the paver

All the main paving and machine functions can be controlled directly by individual push-buttons on the paver operator's ErgoPlus 3 console. By pressing the arrow buttons, up or down, the operator changes modes in the following order: "Neutral", "Job Site", "Positioning" and "Pave". An LED indicates the mode selected.

Safe operation during the night

Glarefree backlighting comes on automatically as darkness sets in so that the paver operator can also work safely on night-time jobs.

Display of the paver operator's console

The high-contrast colour display provides for brilliant readability even in poor lighting conditions. Vital information is shown on menu level 1, such as the positions of the screed tow point rams or the material level in the conveyor tunnel. Further paver functions such as speeds of tamper and vibrators or feed rate of the augers can easily be set up via the display, too. And the display gives access to machine-related information such as fuel consumption or service hours.

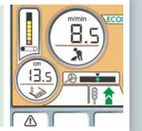

PaveDock Assistant (option)

With the PaveDock Assistant signal lights, the paver operator can give the driver of the feed vehicle unmistakable signals, indicating what needs to be done (e.g. reverse, stop, dump mix). The lights are conveniently activated directly from the paver operator's ErgoPlus 3 console.

Choice of engine speed ranges

For the diesel engine, there is a choice of three modes to select from: MIN, ECO and MAX. To switch modes for engine rpm, all the operator needs to do is press the arrow buttons, up or down. In ECO mode, the engine delivers sufficient power for a great number of paving applications. Operating in ECO mode reduces noise emissions and fuel consumption considerably.

Screed Assist (option)

This button switches Screed Assist on (LED lights up) or off. Screed Assist pressure and balance can be set via the display. Screed Assist is active only when the screed is floating.

The ErgoPlus 3 screed operator's console

The screed is crucial for pavement quality. Therefore, easy and positive handling of all screed functions is of the utmost importance for high-quality road construction.

With ErgoPlus 3, the screed operator has the paving process at his fingertips. All functions are easily comprehensible and all controls are clearly arranged.

The screed operator's console

The screed operator's console is designed in keeping with the conditions prevailing on the job site. Push-buttons are provided for the frequently used functions operated from the screed operator's console. These are watertight and enclosed in palpably raised rings, so that they are identifiable blindfold simply by touch even when wearing work gloves. Important paver and screed data can be called up and adjusted from the screed operator's console, too.

The display of the screed operator's console

The display of the screed operator's console allows the screed operator to control and monitor both the left and the right side of the screed. Machine-related parameters such as tamper speed or conveyor speed can be adjusted conveniently via the display panel of the screed operator's console. The clear menu structure, combined with easily understandable, self-explanatory symbols neutral in language, makes operating the display panel both simple and safe.

Crown adjustment at the press of a button

The crown can be conveniently adjusted at the press of a button on the screed operator's console. When pressing the "plus" or "minus" keys, the set crown value is shown on the display.

Ergonomic screed width control in two speeds

The screed width can be effortlessly adjusted by means of the SmartWheel. This is done in two speeds: slow, for precise control e.g. along an edge, or fast, for rapid extension or retraction of the screed.

Optimum visibility even in darkness

The screed operator's console is specially designed for night-time operation. To prevent operator errors, the buttons are backlit as soon as dusk falls or in darkness. What is more, the downward-angled high-power LED lighting gives the operator a perfect view of all processes associated with the side plate.

VÖGELE Niveltronic Plus

Niveltronic Plus, the System for Automated Grade and Slope Control, is an in-house development by JOSEPH VÖGELE AG based on many years of experience in grade and slope control technology. Easy operation, precision and reliability are its hallmarks, ensuring perfect mastery of all grade and slope control jobs.

This fully integrated system is optimally adapted to the machine technology of the Premium Line pavers. All wiring and connections, for instance, are integrated into the tractor unit and screed, effectively eliminating all risk of damage to these components.

VÖGELE naturally offer a particularly large and practical selection of sensors permitting versatile use of the Niveltronic Plus system. Whether car parks, roundabouts or motorways need to be built or rehabilitated, VÖGELE offer the right sensor for every job-site situation.

Sensors can be changed quickly and easily, for Niveltronic Plus automatically detects which sensor is connected, thus simplifying the configuration process for the user.

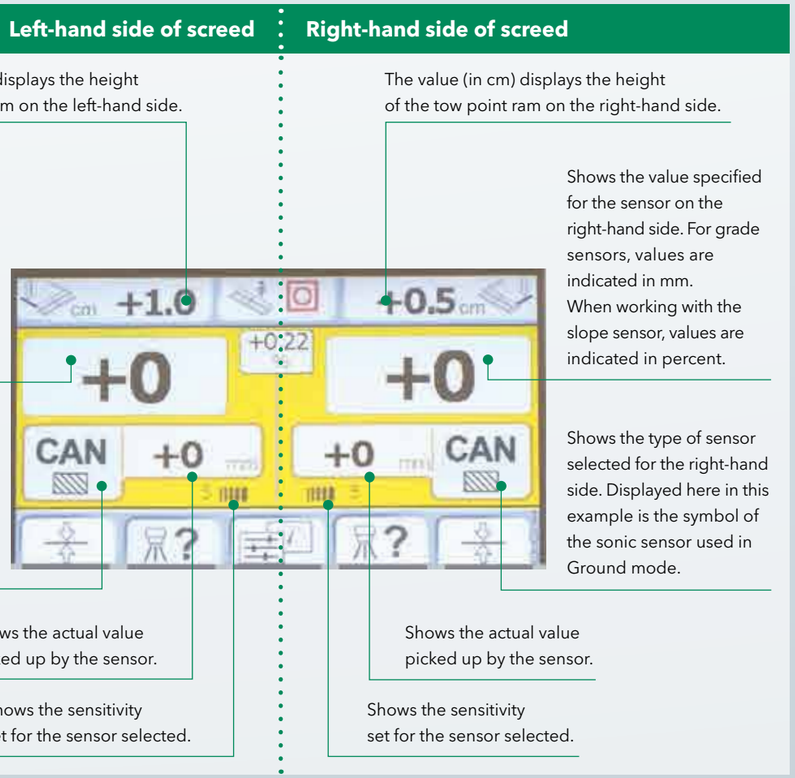

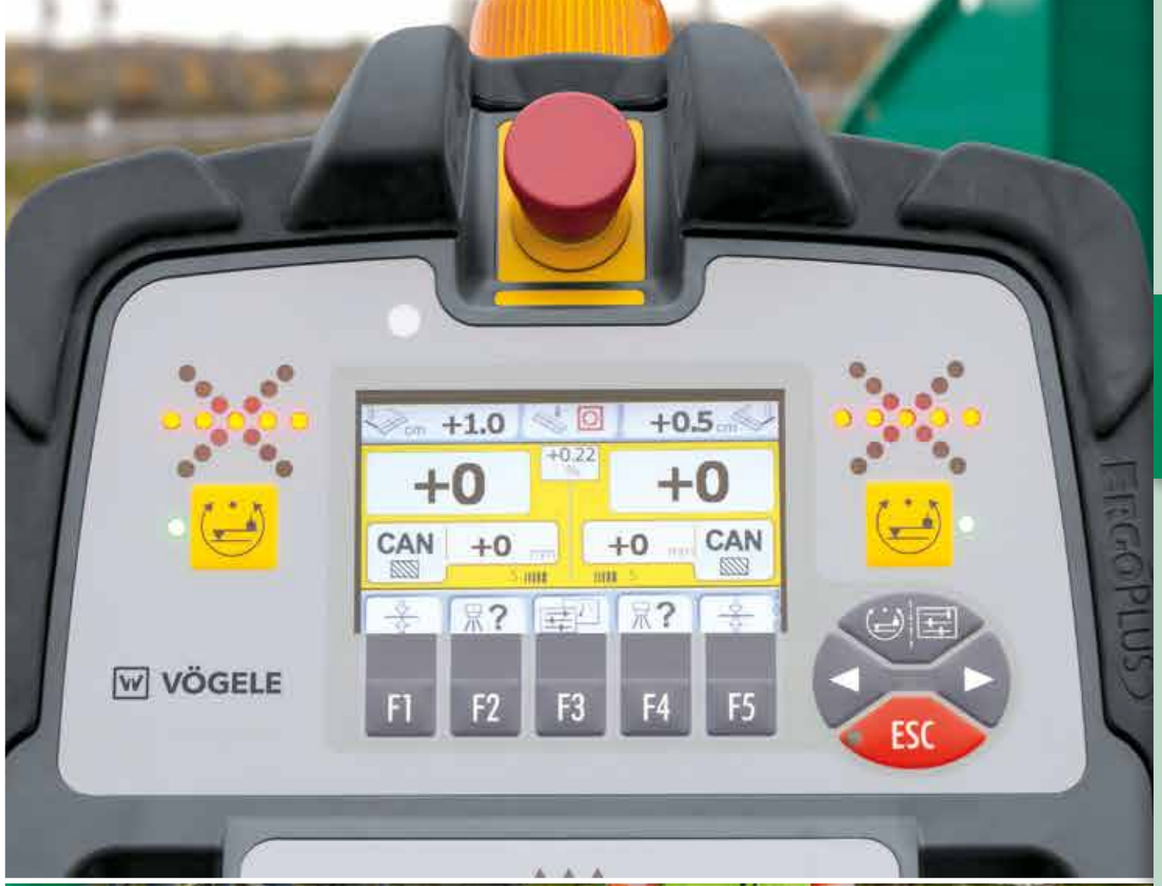

1.

2.

3.

4.

5.

6.

7.

8.

The ErgoPlus 3 operator's platform

1. The comfortable paver operator's platform gives an unobstructed view of all crucial areas on the paver such as material hopper, steering guide or screed.

2. The seats, which swing out to the sides, and the streamlined design of the paver operator's platform provide for maximum visibility of the auger tunnel, permitting the paver operator to keep an eye on the head of mix in front of the screed at all times.

3. Working comfortably
The paver operator's seat and console, as well as the screed operator's console can now be adjusted even more easily to personal needs.

4. A place for everything and everything in its place
The paver operator's platform is streamlined and well organized, offering the paver operator a professional workplace. The operator's console can be protected by a shatter-proof cover to prevent wilful damage.

5. Hardtop provides excellent protection
The modern hardtop made of glass fibre-reinforced polymer material shelters the operator, come rain or shine.

6. Consistent service concept
All "Dash 3" pavers have a consistent service concept with identical intervals.

7. Safe and comfortable ascent
The walkway and comfortable middle ascent on the screed ensure safe and convenient access to the paver operator's platform.

8. Ergonomic screed operator's console
The height and position of the console are easily adjusted. The high-contrast colour display can be read clearly from all angles.

AB 500 and AB 600 Extending Screeds

VÖGELE AB 500 and AB 600 Extending Screeds are the preferred choice on all those jobs wher pave width varies and prime pavement quality counts. Thanks to their sturdy single-tube telescoping system, these screeds can be set quickly and accurately to any pave width desired. Effective sound insulation in the extending screeds reduces noise levels on the job site. In combination with the low-noise tractor unit, these screeds are hence ideally suited for use even in noise sensitive areas.

Both extending screeds are available for the SUPER 1900-3i in the TV version (with tamper and vibrators) for standard compaction or in the TP1 or TP2 versions (with 1 or 2 pressure bars) for high compaction. The AB 500 and AB 600 Extending Screeds in the TP2 Plus version are available for paving binder course and base course with maximum precompaction.

- **The extending screeds** guarantee homogeneous surface texture thanks to uniform heating of screed plates, tamper bars and pressure bars.
- **Even with the paver's engine running** at minimum rpm, the time required for the screed to reach its operating temperature is reduced substantially thanks to an intelligent generator management.
- **When the paver functions** are set to automatic, the generator management system activates Alternating mode for screed heating (heats the screed alternately on the left and right), a feature which is easy on the engine and reduces fuel consumption considerably.

AB 500 TV — Built up to maximum pave width

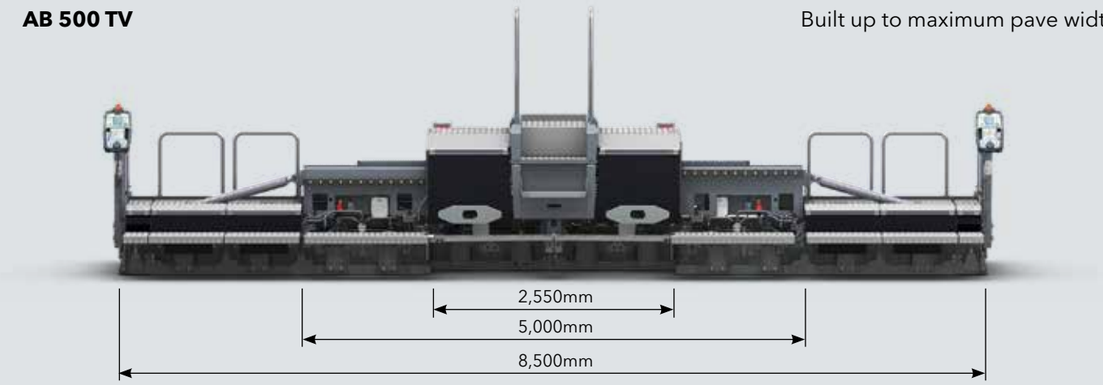

AB 600 TV — Built up to maximum pave width

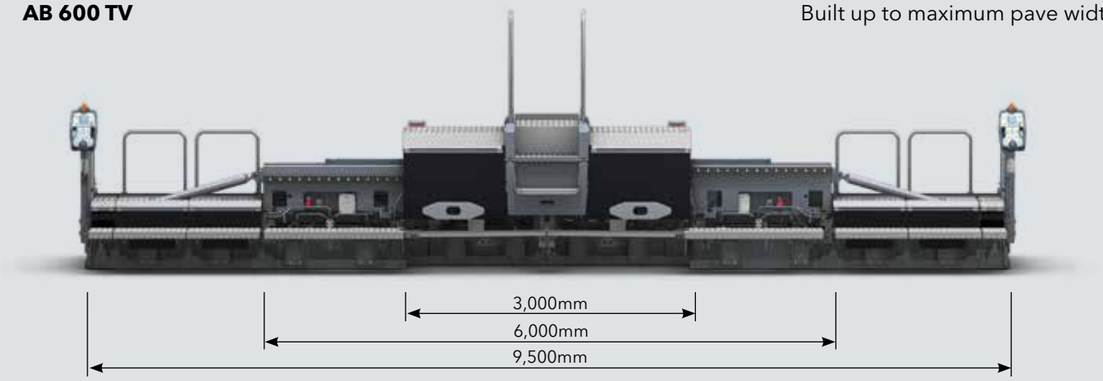

AB 500

Pave widths

- Infinitely variable range from 2.55m to 5m
- Larger widths through the addition of bolt-on extensions up to a maximum of 8.5m

Compacting systems

- AB 500 TV with tamper and vibrators
- AB 500 TP1 with tamper and 1 pressure bar
- AB 500 TP2 with tamper and 2 pressure bars
- AB 500 TP2 Plus with tamper and 2 pressure bars for maximum precompaction

AB 600

Pave widths

- Infinitely variable range from 3m to 6m
- Larger widths through the addition of bolt-on extensions up to a maximum of 9.5m

Compacting systems

- AB 600 TV with tamper and vibrators
- AB 600 TP1 with tamper and 1 pressure bar
- AB 600 TP2 with tamper and 2 pressure bars
- AB 600 TP2 Plus with tamper and 2 pressure bars for maximum precompaction

SB 250 and SB 300 Fixed-Width Screeds

Fixed-width screeds from VÖGELE deliver absolutely high-quality, perfectly even results. They show their strengths wherever large pave widths have to be handled, when laying down thick layers (e.g. crushed-stone bases) and where high degrees of precompaction have to be achieved. The SUPER 1900-3i can be combined with the new SB 300 Fixed-Width Screed as well as the proven SB 250.

Both of these fixed-width screeds boast a considerable range of pave widths and, with a maximum pave width of 11m, offer the ideal conditions for jointless, cost-effective paving on large job sites.

The new SB 300 Fixed-Width Screed offers a host of user-friendly innovations. The possibility of hydraulically adjusting the screed by up to 2.5m with the newly developed hydraulic bolt-on extensions is a globally unique feature. This guarantees high flexibility during paving. In addition, a special telescoping and positioning system greatly reduces the set-up times when mounting the fixed bolt-on extensions.

Another benefit for users is that the tamper stroke can now be adjusted hydraulically when required, i.e. simply by pressing a button on the paver operator's or screed operator's console. This speeds up processes, especially when working with varying layer thicknesses. The screed is also equipped with a new heating system that heats the screed plate, tamper and pressure bars twice as fast as before and much more uniformly.

SB 250 TV Built up to maximum pave width with hydraulic bolt-on extensions

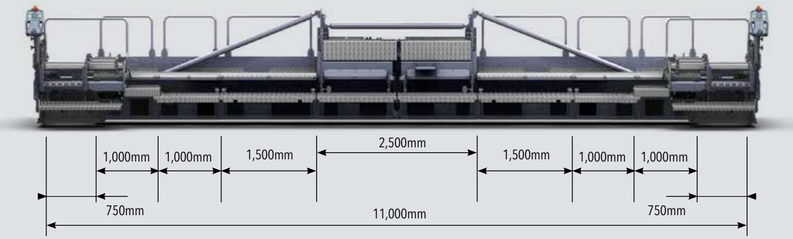

Pave widths

- Basic width 2.5m. Larger widths through the addition of bolt-on extensions up to a maximum of 11m
- Thanks to 75cm hydraulic bolt-on extensions, pave width is infinitely variable within a range of 1.5m.

Compacting systems

- SB 250 TV with tamper and vibrators
- SB 250 TP1 with tamper and 1 pressure bar
- SB 250 TP2 with tamper and 2 pressure bars
- SB 250 TVP2 with tamper, vibrators and 2 pressure bars

SB 300 TV Built up to maximum pave width with hydraulic bolt-on extensions

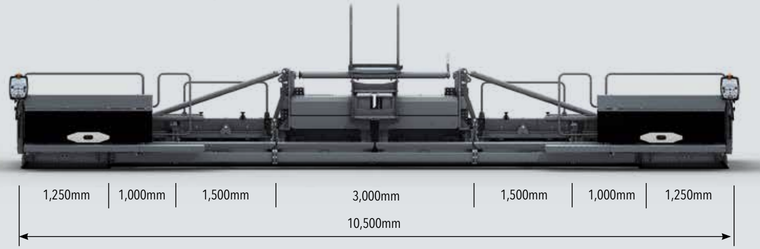

Pave widths

- Basic width 3m. Larger widths through the addition of bolt-on extensions up to a maximum of 11m
- Thanks to 125cm hydraulic bolt-on extensions, pave width is infinitely variable within a range of 2.5m

Compacting systems

- SB 300 TV with tamper and vibrators
- SB 300 TP1 with tamper and 1 pressure bar
- SB 300 TP2 with tamper and 2 pressure bars

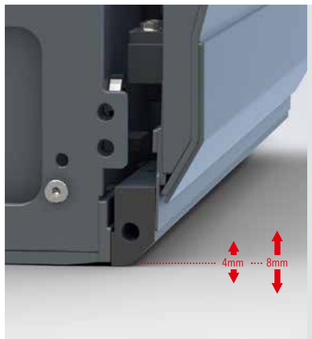

Hydraulic tamper-stroke adjustment at the press of a button

The correct setting of the tamper stroke has a key impact on the compaction results and floating behaviour of fixed-width screeds. Since adjusting the tamper stroke mechanically is a very time-consuming process, it is often not adjusted even when different layer thicknesses are being paved with one and the same screed. This prompted VÖGELE to develop the hydraulic tamper-stroke adjustment system.

With this system, paver operators can set the optimum tamper stroke of 4mm or alternatively 8mm for the particular paving job simply at the push of a button. This option allows high-quality paving results to be achieved even more conveniently.

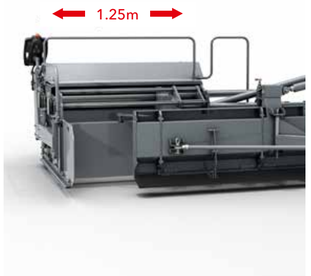

High flexibility thanks to hydraulic bolt-on extensions

Both fixed-width screeds offer high flexibility when combined with the newly developed extra-wide hydraulic bolt-on extensions. Using the SmartWheel, the pave width can now be hydraulically varied by 1.25m on each side of the screed – adding up to a total adjustment range of 2.5m. This offers a high degree of flexibility and saves time, too, particularly on projects involving varying pave widths.

All the facts at a glance

Dimensions in mm
L* = Dependent on screed type
(see specification)

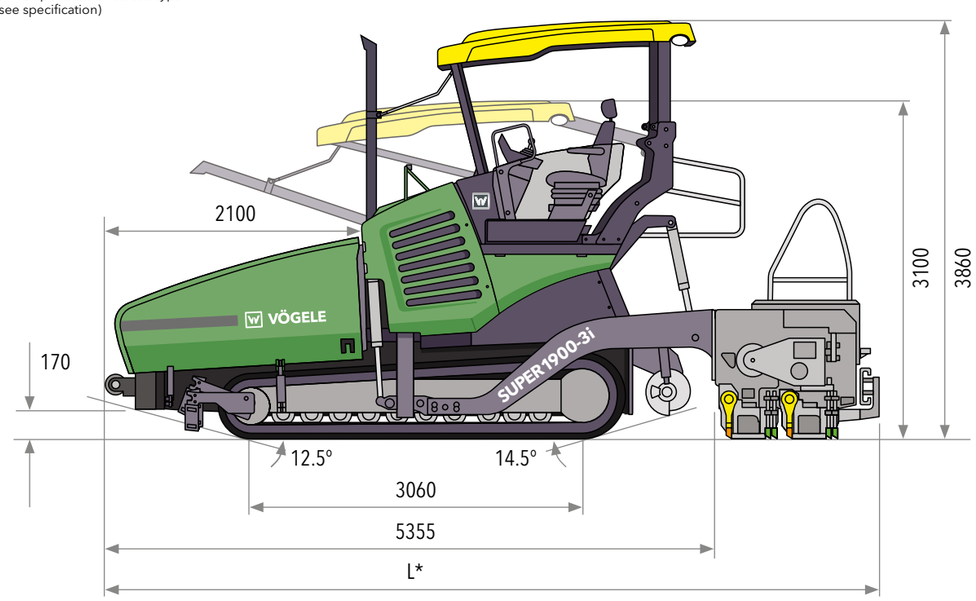

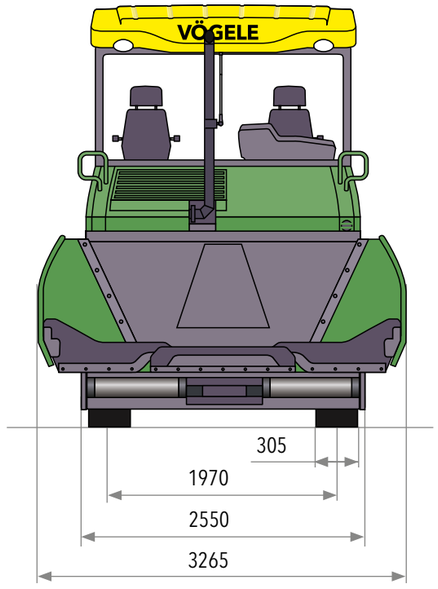

Power unit	
Engine	6-cylinder diesel engine, liquid-cooled
Manufacturer	Cummins
Type	QSB6.7-C190
Output	
Nominal	142kW at 2,000rpm (according to DIN)
ECO mode	137kW at 1,700rpm
Exhaust emissions	
standard	EU Stage 4, US EPA Tier 4f
Exhaust gas after-treatment	DOC, SCR
Emission data	
Sound power level	≤109dB(A) (2000/14/EC and DIN EN 500-6)
Daily noise exposure level	>80dB(A) (DIN EN 500-6)
Fuel tank	400 litres

Undercarriage	
Crawler tracks	with rubber pads
Ground contact	3,060mm x 305mm
Track tension adjuster	spring assembly
Track roller lubrication	lifetime

Undercarriage	
Traction drive	electronically controlled separate hydraulic drive provided for each crawler track
Speeds	
Paving	up to 25m/min., infinitely variable
Travel	up to 4.5km/h, infinitely variable

Material hopper	
Hopper capacity	14t
Width	3,265mm
Feed height	615mm (bottom of material hopper)
Push-rollers	
Standard	oscillating
Position	can be displaced forwards by 75mm or 150mm
Option	sprung (PaveDock)

Conveyors and augers	
Conveyors	2, with replaceable feeder bars, conveyor movement temporarily reversible
Drive	separate hydraulic drive provided for each conveyor

Conveyors and augers	
Speed	up to 31m/min., infinitely variable (manual or automatic)
Augers	2, with exchangeable auger blades, auger rotation reversible
Diameter	400mm
Drive	separate hydraulic drive provided for each auger
Speed	up to 79rpm, infinitely variable (manual or automatic)
Height	infinitely variable by 15cm, hydraulic
Lubrication	centralized lubrication system with electrically driven grease pump

Screed options		
AB 500	basic width	2.55 to 5m
	maximum width (TV/TP1/TP2)	8.5m
	compacting systems	TV, TP1, TP2, TP2 Plus
AB 600	basic width	3 to 6m
	maximum width (TV/TP1/TP2)	9.5m
	maximum width (TP2 Plus)	8.5m
	compacting systems	TV, TP1, TP2, TP2 Plus

Screed options		
SB 250/300	basic width	2.5m/3m
	maximum width (TV/TP1)	11m
	compacting systems	TV, TP1, TP2
Layer thickness	up to 40cm (SB 250/300)	
Screed heating	electric by heating rods	
Power supply	three-phase A.C. generator	

Dimensions (transport) and weights		
Length	paver with screed	
AB 500/600	TV	6.6m
	TP1/TP2/TP2 Plus	6.73m
SB 250/300	TV/TP1/TP2	6.5m
Weights	paver with screed	
AB 500 TV	pave widths up to 5m	21,050kg
	pave widths up to 8.5m	26,900kg

Key: **DOC =** Diesel Oxidation Catalyst **SCR =** Selective Catalytic Reduction **AB =** Extending Screed **SB =** Fixed-Width Screed **TV =** with tamper and vibrators **TP1 =** with tamper and 1 pressure bar **TP2 =** with tamper and 2 pressure bars **TP2 Plus =** with special tamper, 2 pressure bars and additional weights

Subject to technical modification.

A WIRTGEN GROUP COMPANY

VÖGELE

Your VÖGELE QR Code will take you directly to the SUPER 1900-3i on our website.

JOSEPH VÖGELE AG
Joseph-Vögele-Str. 1
67075 Ludwigshafen · Germany
www.voegele.info

T: +49 621 / 8105 0
F: +49 621 / 8105 461
marketing@voegele.info

® ERGOPLUS, InLine Pave, NAVITRONIC, NAVITRONIC Basic, NAVITRONIC Plus, NIVELTRONIC, NIVELTRONIC Plus, RoadScan, SprayJet, VÖGELE, VÖGELE PowerFeeder, PaveDock, PaveDock Assistant, AutoSet, AutoSet Plus, AutoSet Basic, ErgoBasic and VÖGELE-EcoPlus are registered Community Trademarks of JOSEPH VÖGELE AG, Ludwigshafen/Rhein, Germany. PCC is a registered German Trademark of JOSEPH VÖGELE AG, Ludwigshafen/Rhein, Germany. ERGOPLUS, NAVITRONIC Plus, NAVITRONIC BASIC, NIVELTRONIC Plus, SprayJet, VISION, VÖGELE, VÖGELE PowerFeeder, PaveDock, PaveDock Assistant, AutoSet, AutoSet Plus, AutoSet Basic and VÖGELE-EcoPlus are trademarks registered in the US Patent and Trademark Office to JOSEPH VÖGELE AG, Ludwigshafen/Rhein, Germany. Legally binding claims cannot be derived from written information or pictures contained in this brochure. Pictures may include optional extras. We reserve the right to make technical or design alterations.

2724907 EN/03.19