# TECHNICAL DATA FOR 200/250T A-FRAME

## MAIN DATA

**A-FRAME MAIN DATA**

| | | |
|---|---|---|
| CAPACITY FOR INTERNAL HANDLING | : | 200T |
| CAPACITY FOR EXTERNAL HANDLING | : | 250T |

(SEE TABLE OF CAPACITY FOR DIFFERENT SEA STATEES)

| | | |
|---|---|---|
| PIVOT INWARD | : | 5000 mm |
| PIVOT OUTWARD | : | 8500 mm |
| FREE HEIGHT IN VERTICAL POSITION | : | 13000 mm |
| FREE OPNING AT DECK LEVEL | : | ~11500 mm |
| FREE OPENING AT TOP OF A-FRAME | : | ~9000 mm |
| PIVOT TIME OUTWARDS | : | 260 SEC. |
| PIVOT TIME INWARDS | : | 150 SEC. |

**HYDRAULIC MAIN SYSTEM :**

| | | |
|---|---|---|
| MAIN PRESSURE | : | 250 BAR |
| CAPACITY OF HYDR. PUMP | : | 425L/MIN |
| CAPACITY OF HYD OIL TANK (NORMAL OIL LEVEL) | : | 3000 L |

**EL. MOTOR DATA:**

| | | |
|---|---|---|
| EL.MOTOR TYPE. | : | M2CA 280 MC4 V3 |
| VOLTAGE | : | 440V/60HZ/3PH |
| EL.MOTRO R.P.M. | : | 1800/MIN. |
| FULL POWER RATING (S40%) | : | 352 A |
| FULL LOAD CURRENT (S6 40 %) | : | 215 KW |

600 V
235 AMP

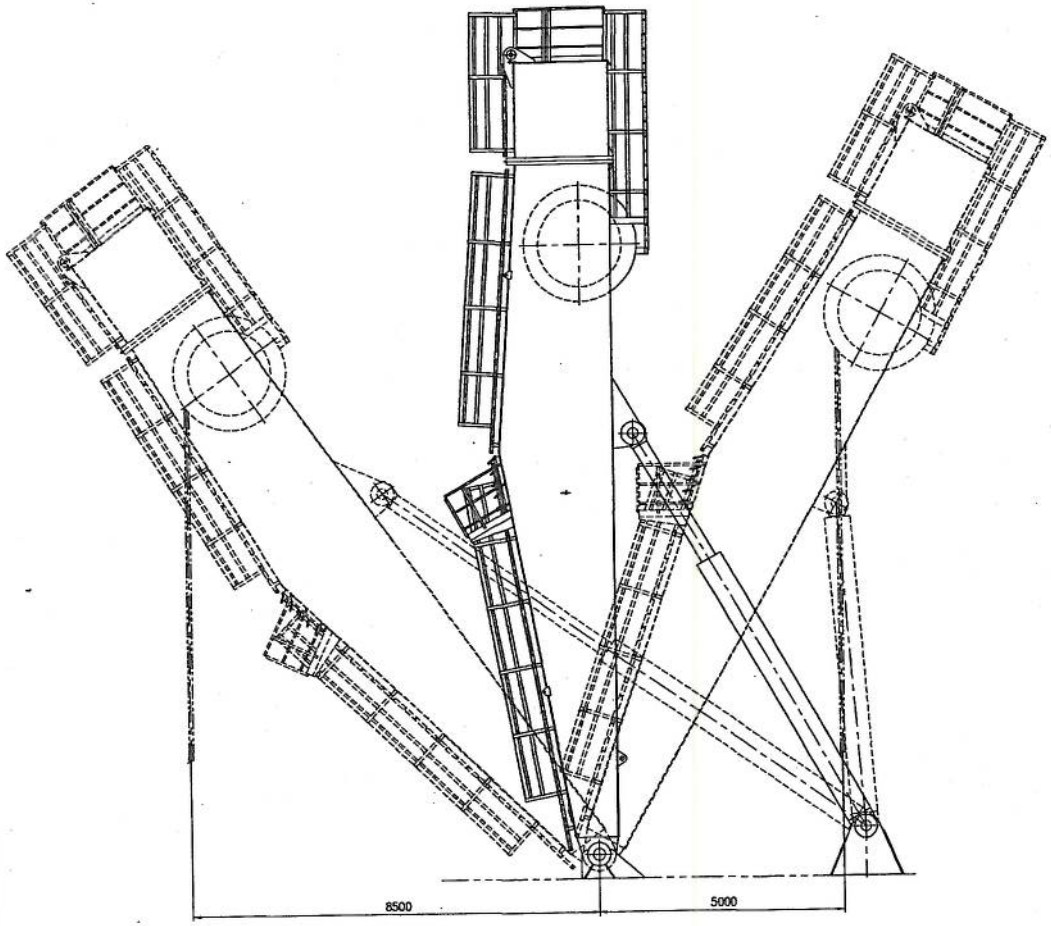


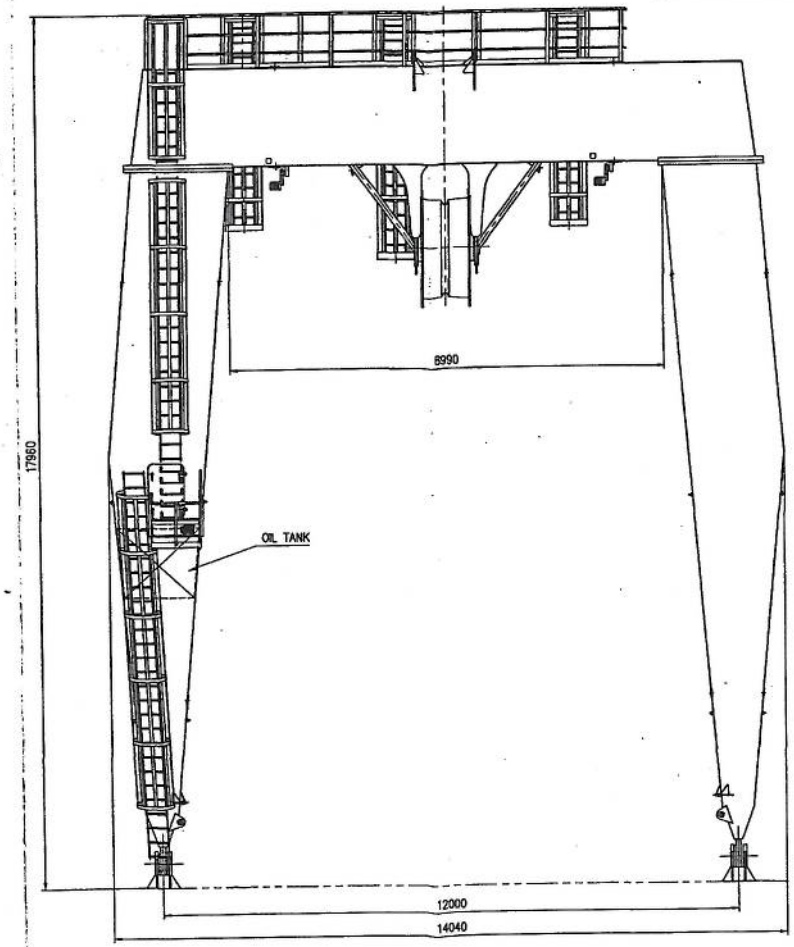


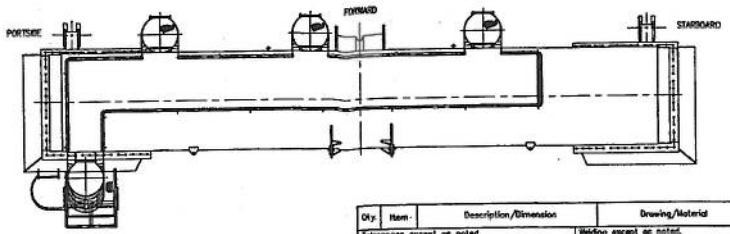


| Rev. | Description of revision | Date / Sign |
|---|---|---|
| | | |

| Qty. | Item | Description/Dimension | Drawing/Material | Unit weight |
|---|---|---|---|---|
| | | | | |

Tolerances except as noted.
Medium NS-ISO 2768-1
Grade A NS 1432

Welding except as noted.
NS 470, NS-EN 287-1/2
NS-EN 288-1/2/3/4

This document and all information and data disclosed herein or hereafth are the confidential and proprietary property of A/S Hydralift and are not to be used, reproduced or disclosed in whole or in part for or to anyone without the written permission of A/S Hydralift.

| Designed | Drawn | Projection | Scale |
|---|---|---|---|
| 27.05.97 TOB | 27.05.97 TOB | | 1:50 |
| Checked | Approved | | |
| – | 29.05.97 OPT | | |

HYDRALIFT
Kristiansand, Norway

GENERAL ARRANGEMENT
200T./250T. A-FRAME

Replaces: | Replaced by:

AutoCAD file: K1012G04

K-A1-1012-G04

Rev. 0

Lloyd's Register

**Lloyd's Register Marine Division**
*29 Wellesley Road, Croydon, Surrey CR0 2AJ*
*Telephone 0181 681 4844 Fax 0181 681 4759*



Document number LAMH 3064-1

Issue number 1

## DESIGN APPRAISAL DOCUMENT

| Date | Quote this reference on all future communications |
|---|---|
| 8 September 1997 | LAMH/2/PCJ/3064 |

# 200 TONNE A-FRAME
# HYDRALIFT - K4226
# AKER MARITIME

The plans, as listed in Appendix A, have been examined where appropriate for compliance with the:

LR Code for Lifting Appliances in a Marine Environment Chapter 3 Section 3/4

and are Approved as submitted or Noted for information.

The structure has been examined for the following design criteria for operations in seas upto those described as Beaufort No. 2.

| | |
|---|---|
| SWL | 200 tonne |
| Outreach | 8.5 metre |
| Hoist Factor | 1.30 |
| Duty Factor | 1.20 |
| Roll/Pitch | 5°/2° |
| Offlead/Sidelead | 5°/2° |

The attachment to and the adequacy of the supporting structure is outwith the scope of our involvement.

The installation is to be tested in accordance with Chapter 9 of the Code.

S Young

S Young
Senior Structural Engineer
Lifting Appliances & Materials Handling Dept.

FINAL ACCEPTANCE OF ACTUAL ITEM(S) DEPEND(S) ON SATISFACTORY SURVEY AND TESTING

*NOTICE: This document is subject to the terms and conditions overleaf, which form part of this document.*



CORPORATE CERTIFICATE PAPER TYPE C (04/97)

# Installation of 200/250T A-frame

## 1. General

The A-frame should be placed on supports and screwed together before A-frame shall be mounted on the ship. For position and height of the support block see drw:K-A1-1012-177
To save time the following components should be mounted before installation on board the ship.

Cylinders Drw. K1012-A2-1012-160
Wiresheave Drw. K1012-A1-1012-138
Jib bearing Drw. K1012-A2-1012-151

## 2. Bolt connection on top of A-frame

See drawing K-A1-1012.

The drawing indicates clamping load and tightening torque for the bolts.

3. After the A-frame is installed on board the ship, the following has to be done before the aggregate can be started up:

   a) Pipework on deck to connect the hydraulic pipe from the A-frame to the cylinders.

   b) Power supply to the aggregate.

   c) Fill up hyd. tank with hyd. oil ~ 3000 l.

   d) Check that all bolts are tightened.

# General

The A-frame shall be operated by authorised personnel only.

All the hyd. valves oilfilter and startercabinet is located in the power pack room on the portside leg.
On portside leg reachable from decklevel, there is a eletrical switch with bottom for start and stop of the power pack.
Prior to activate the A-frame the power pack must be running.

## Emergency stop

The A-frame have two emergency stop.
One is located on the el switch described above. This switch stop the power pack.

The other emergency stop is on the portable remote control, this one don't stop the power pack but only the movement of the A-frame.

The emergency stop is a red "mushroom" activated by pushing it down and deactivated by pulling it out.

## Operating the A-frame

When the powerpack is running, operation of movement of the a-frame can be controlled by the joystick on the portable remote control.The plug in system for the cable is located in a cabinet on portside leg.Open the door on the cabinet put the cable through hole in the bottom plug in the cable and shut the door when operating the a-frame.

### Emergency operation of the A-frame

If the portable control cabinet don't function for any reason the A-Frame can be operation by an emergency switch (located in same cabinet as the el. cable shall be plugged in).
The bottoms have the same function as the joystick. Top bottom is for inwards movement and the lower bottom is for outwards movement.

## Capacity of the A-frame.

The A-Frame have the following capacty:
250T for outwards handling.
200T for internal handling.

For further information about capacity of A-Frame in different sea-states (wind, speeds, wave heights, accelrationes etc. see table below.

To make sure that the A-Frame can take full load according to table below it is important that the A-Frame cylinders and winchwire is posioned as shown on the drawing below.

LOADS AND LOAD-FACTORS FOR DIFFERENTE SEA-STATES AND LOAD CASES

| Case | Seastate | Sign. wave h. | Wind speed (m/s) | Transverse Windload (tonnes) | Transverse Acc. 0.2 g. (tonnes) | **SWL (tonnes)** | Sidelead (deg) | Trim (deg) | Transv. comp. of design load | Total transv. load |
|---|---|---|---|---|---|---|---|---|---|---|
| | 0 | | 0 | 0 | 12 | **200** | 0 | 5 | 21.0 | 33.0 |
| | 1 | 0.6 | 0 | 0 | 12 | **200** | 0 | 5 | 21.0 | 33.0 |
| 1a | 2-3 | 1.6 | 0 | 0 | 12 | **200** | 0 | 5 | 21.0 | 33.0 |
| Internal | 5 | 3.0 | 0 | 0 | 12 | **177** | 0 | 5 | 21.1 | 33.1 |
| Handling | 6 | 3.9 | 0 | 0 | 12 | **177** | 0 | 5 | 21.1 | 33.1 |
| No wind | 7 | 7.0 | 0 | 0 | 12 | **177** | 0 | 5 | 21.1 | 33.1 |
| | 1 | 0.6 | 20 | 8.8 | 12 | **200** | 0 | 5 | 18.8 | 39.6 |
| 2a | 2-3 | 1.6 | 20 | 8.8 | 12 | **200** | 0 | 5 | 18.8 | 39.6 |
| Internal | 5 | 3.0 | 20 | 8.1 | 12 | **177** | 0 | 5 | 18.8 | 38.9 |
| Handling | 6 | 3.9 | 20 | 8.1 | 12 | **177** | 0 | 5 | 18.8 | 38.9 |
| wind 20/m/s | 7 | 7.0 | 20 | 8.1 | 12 | **177** | 0 | 5 | 18.8 | 38.9 |
| | 0 | | 0 | 0.0 | 12 | **250** | 2 | 5 | 47.5 | 59.5 |
| | 1 | 0.6 | 0 | 0 | 12 | **238** | 2 | 5 | 47.6 | 59.6 |
| 1b | 2-3 | 1.6 | 0 | 0 | 12 | **142** | 3 | 5 | 47.7 | 59.7 |
| Outboard | 5 | 3.0 | 0 | 0 | 12 | **89** | 3 | 5 | 47.3 | 59.3 |
| Handling | 6 | 3.9 | 0 | 0 | 12 | **74** | 4 | 5 | 47.4 | 59.4 |
| No wind | 7 | 7.0 | 0 | 0 | 12 | **29** | 6 | 5 | 47.8 | 59.8 |
| | 1 | 0.6 | 20 | 9.9 | 12 | **238** | 2 | 5 | 42.5 | 64.5 |
| 2b | 2-3 | 1.6 | 20 | 7.1 | 12 | **142** | 3 | 5 | 42.6 | 61.6 |
| Outboard | 5 | 3.0 | 20 | 5.5 | 12 | **89** | 3 | 5 | 42.2 | 59.7 |
| Handling | 6 | 3.9 | 20 | 5.0 | 12 | **74** | 4 | 5 | 42.4 | 59.4 |
| wind 20m/s | 7 | 7.0 | 20 | 3.7 | 12 | **29** | 6 | 5 | 42.7 | 58.3 |

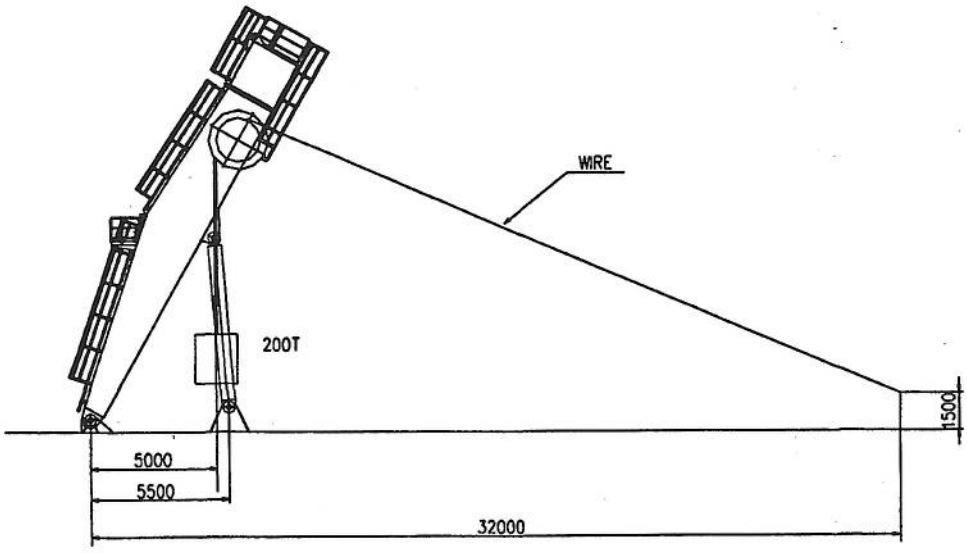


INTERNAL HANDLING FIG. 1.1

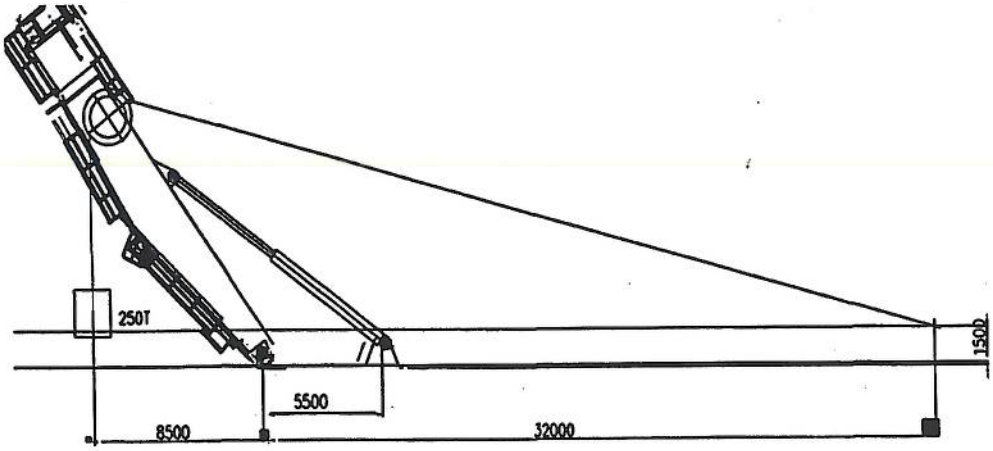


OUTBOARD HANDLING FIG. 1.2