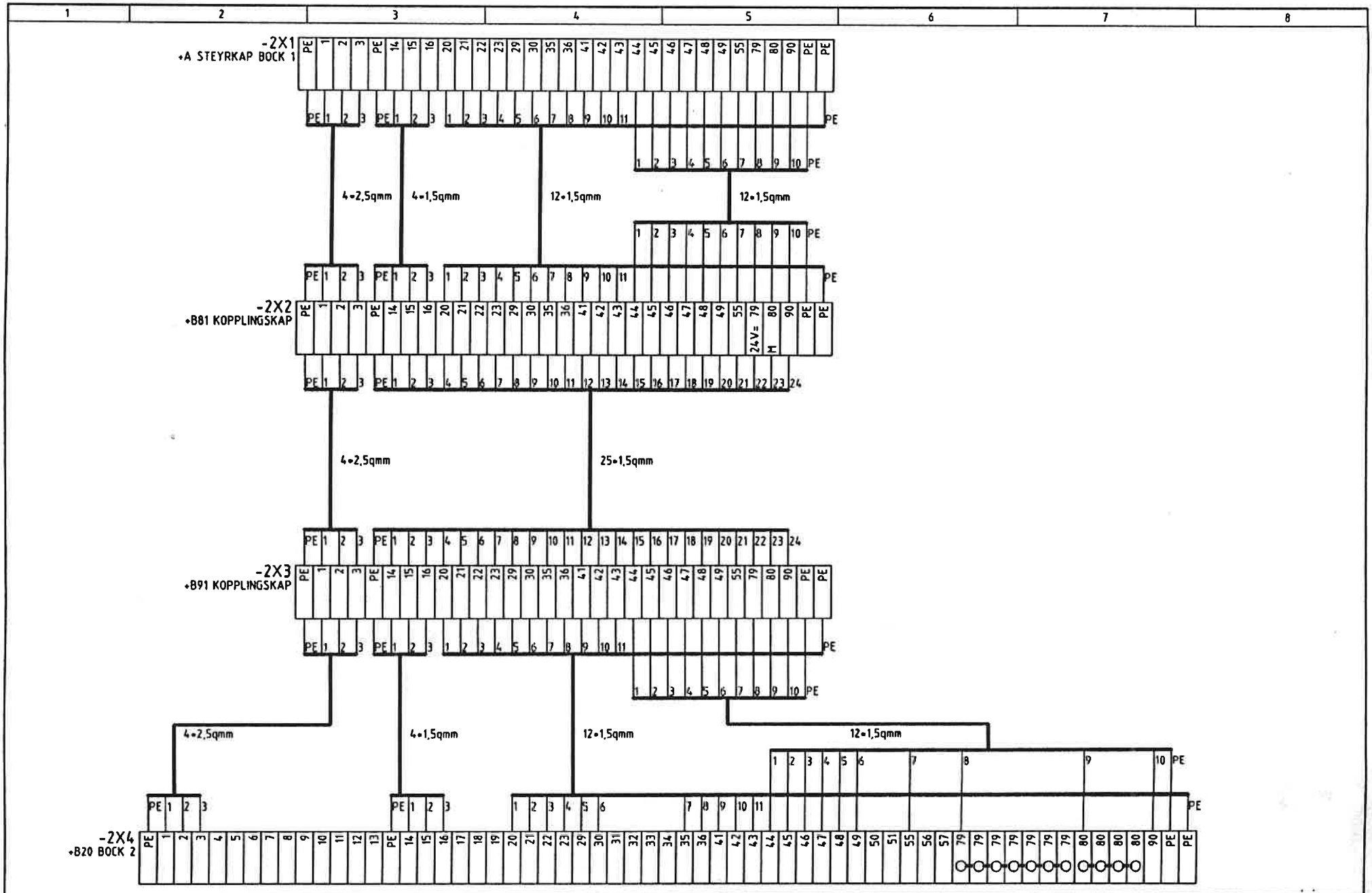

c				Date	2.12.1992	NEUERO TECHNOLOGY GMBH	Verdrahtungsplan		
b				des. by	Thiel		LYFTBOCKAR		
a				checked			BOCK 2		
	Update	Date	Name	Stand.	substit. by:	substit. for:	Origin:	K 3270-8106 92/45	page 2 / 4 p.

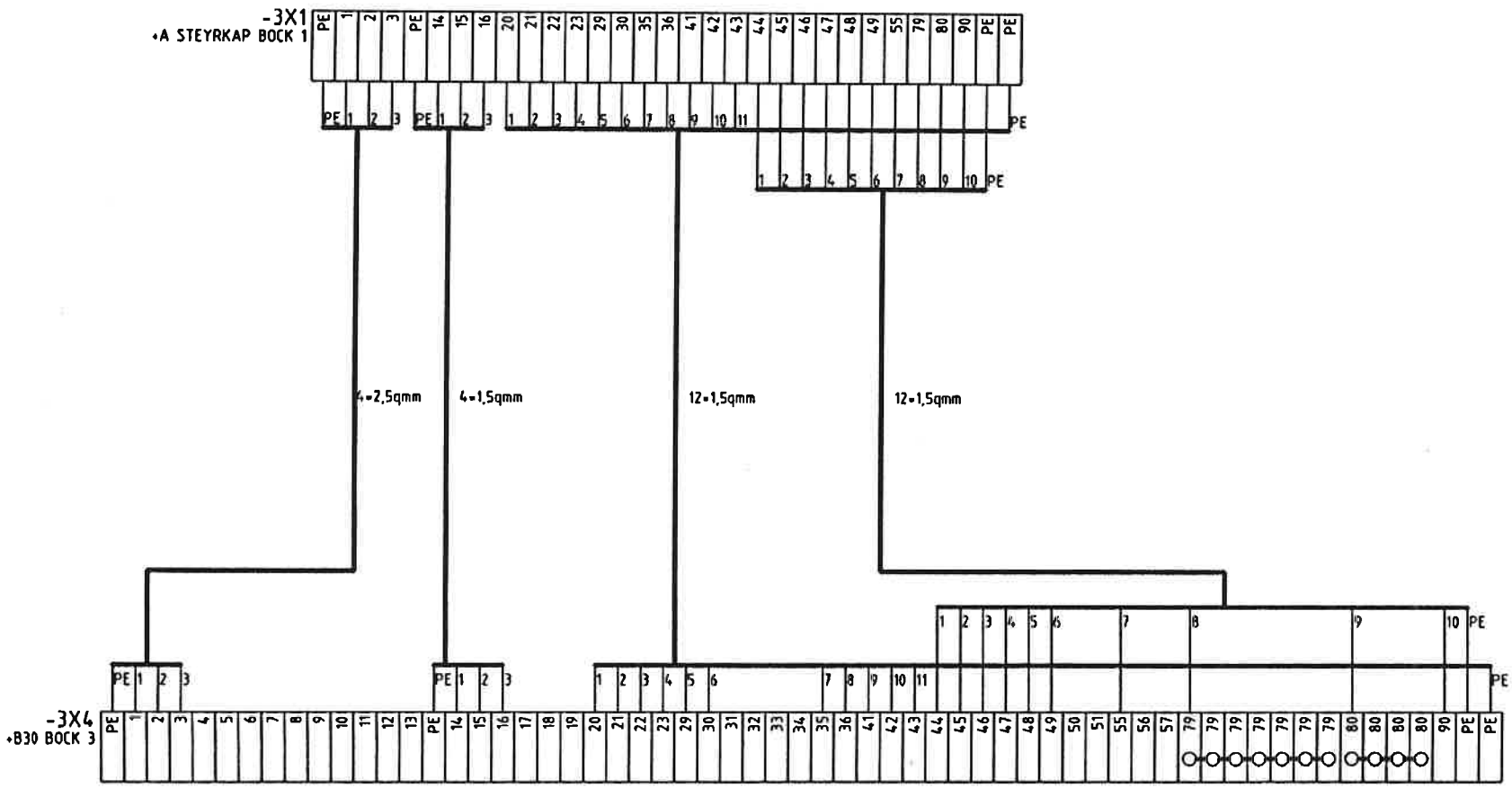

c				Date	3.12.1992		NEUERO TECHNOLOGY GMBH	Verdrahtungsplan	
b				des. by	Thiel			LYFTBOCKAR	
a				checked				BOCK 3	
	Update	Date	Name	Stand.		substit. by:	substit. for:	Origin:	K 3270-8106 92/45

page 3
4 p.

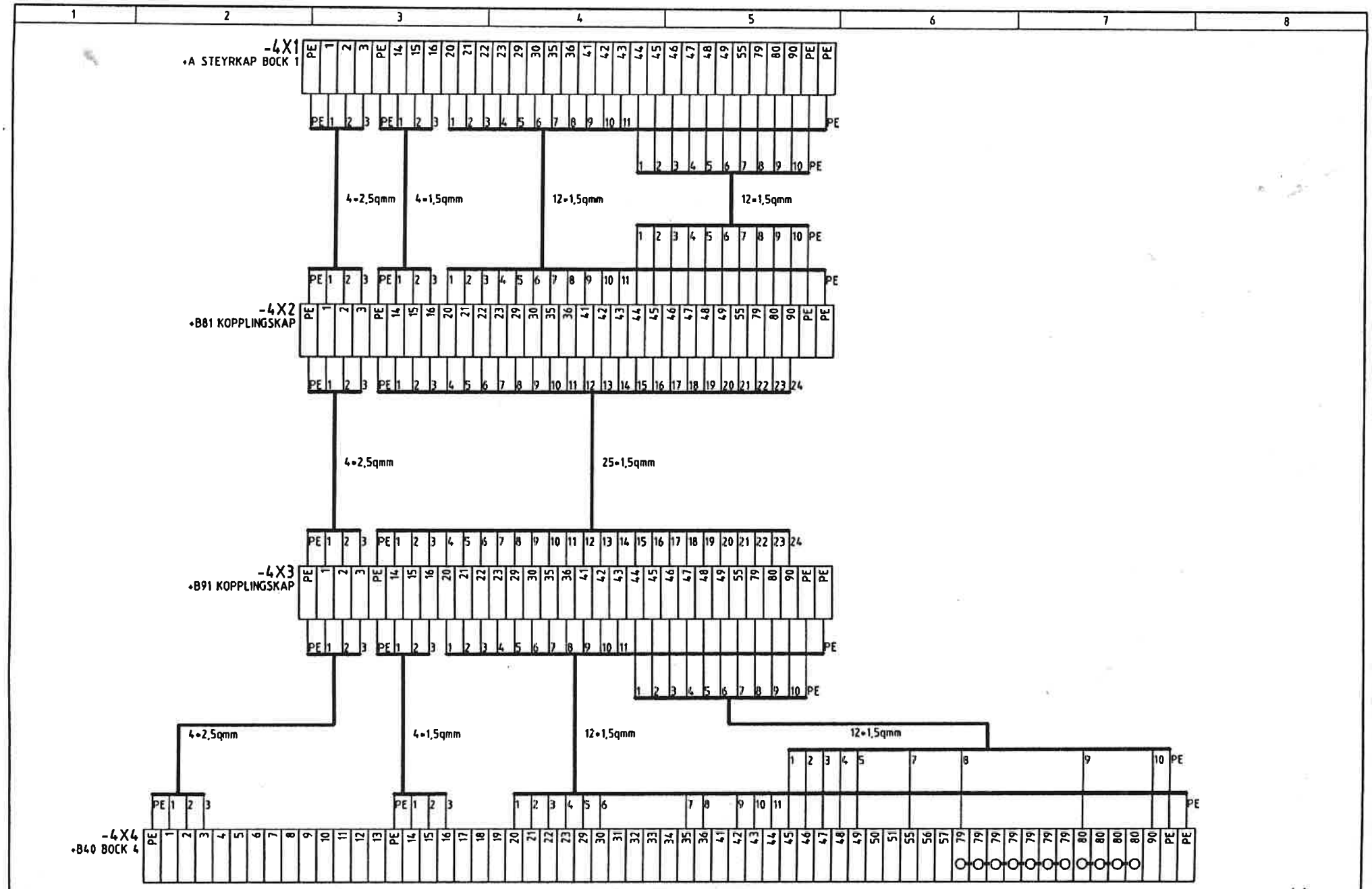

c			Date	3.12.1992
b			des. by	Thiel
a			checked	

NEUERO TECHNOLOGY GMBH

Verdrahtungsplan
LYFTBOCKAR
BOCK 4

K 3270-8106 92/45

page 4

1

TECHNICAL DATA

SNO 1002

FUNCTION According to EN 60204-1		Emergency-Stop Relay
Function Display		3 LED´s green
Function Diagram		FD 0108 W1
POWER SUPPLY DATA		
Rated Voltage U_N	V AC	24 / 115 / 120 / 230
Rated Voltage U_N	V DC	24
Rated Consumption at 50 Hz and U_N (AC)	VA	4,2 / 4,2 / 4,2 / 4,2
Rated Consumption at 50 Hz and U_N (AC)	W	4,0 / 4,0 / 4,0 / 4,0
Rated Consumption at U_N (DC)	W	2,4
Residual Ripple	V_{ss}	2,4
Rated Frequency	Hz	50 to 60
Operating Voltage Range		0,8 to 1,1 x U_N
CONTROL CIRCUIT only for supplying the control inputs		
Control Output Y11 with respect to PE/A2 (AC-/DC-Unit)		
Line Resistance (Control Inputs)	Ω	≤ 70
Rated Output Voltage	V DC	24
No-Load Voltage (AC-Unit)	V DC	≤ 40
Rated Current	mA	80
Rated Short-Circuit Current I_K Max.	mA	3000
Fuse		AC: Short-Circuit Proof Transformer DC: PTC-Resistance
Response Time (PTC)	s	3
Recovery Time (PTC)	s	2
Control Inputs Y12, Y13, Y21, Y22:		
Rated Current Input K1	mA	100
Rated Current per Input K2, K3	mA	40
Response Time t_A K1, K2, K3	ms	25
Release Time t_{R1} Start-Up Cycle K1	ms	70
Release Time tr for the E-Stop K2, K3	ms	5
Minimum Switch-ON Time t_M for K1	ms	60
OUTPUT CIRCUIT		
Contact Equipment		3 N.O. Safety Contact 1 N.C. Control Contact 1 N.O. Fleeting Contact
Contact Type		Forced Guided Contact
Contact Material		Ag-Alloy; Gold-Plated
Switching Voltage U_n	V AC/DC	230/230
Maximum Rated Current I_n per Contact	A	6
Maximum Total Current for all Contacts	A	18
Application Category Acc. to EN 60947-5-1: 1991		AC-15: U_e 230 V AC, I_e 4 A DC-13: U_e 24 V DC, I_e 6 A
Short-Circuit Protection, Max. Fuse Element Class gG	A	6
Permissible Switching Frequency	Switching Cycle/h	3600
Mechanical Lifetime	Switching Cycles	10×10^6
GENERAL DATA		
Creepage and Clearance Distances Between Circuits According to DIN VDE 0110-1:04.97: Rated Withstand Voltage	kV	4
Over-Voltage Category		III
Contamination Level		3 Outside, 2 Inside
Design Voltage	V AC	300
Test Voltage U_{eff} 50 Hz acc. to DIN VDE 0110-1, Table A.1	kV	2,21
Protection Class Housing/Terminals acc. to DIN VDE 0470 Sec. 1:11.92		IP 40/IP 20
Radiated Noise		EN 50081-1:03.93, -2:03.94
Noise Immunity		EN 50082-2:1995
Ambient Temperature, Working Range	°C	- 25 to + 55
Dimension Diagram		S 4-6
Connection Diagram		KS 0282/4
Weight	kg	0,6 (AC-Unit), 0,5 (DC-Unit)
Approvals		BG, CSA, SAG, UL

GENERAL TECHNICAL SPECIFICATIONS Page i.11

Application Example

A 1001

Two-Channel Emergency-Stop Circuit

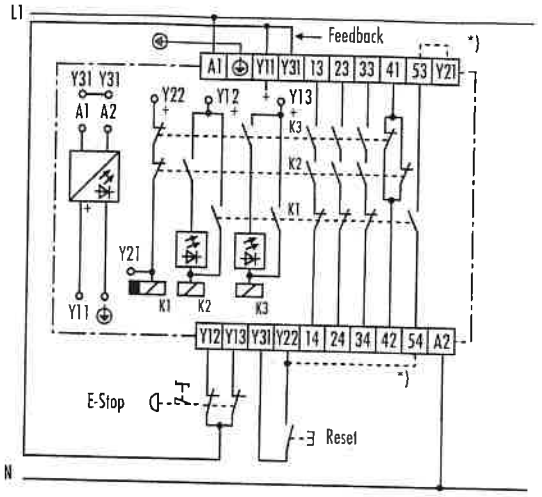

The dual channel E-Stop circuit switches off even if one of the two contacts of the E-Stop button does not open . If a fault occurs (e.g. the E-Stop contact connected to Y13 does not open), the safety circuit is activated by the second (redundant) contact Y12. The enabling current paths 13/14, 23/24 and 33/34 open, the auxiliary contact 41/42 closes. The remaining opened contact of K3 in the current path of K1 prevents the restart through the RESET switch. (*) The RESET switch can be monitored through the fleeting contact 53-54. If the RESET switch is closed before the power supply is applied to terminals Y12 and Y13, or there is a short circuit in the cable, the enabling current paths will remain open. If however, a short circuit in the RESET cable should occur when the relay is already active the cyclic self-checking feature of the item will detect it when switching the supply off/on. As a consequence the enabling current paths will not close and the safety function is guaranteed.

Application Example

A 1002

Two-Channel Sliding Safety Gate Monitoring

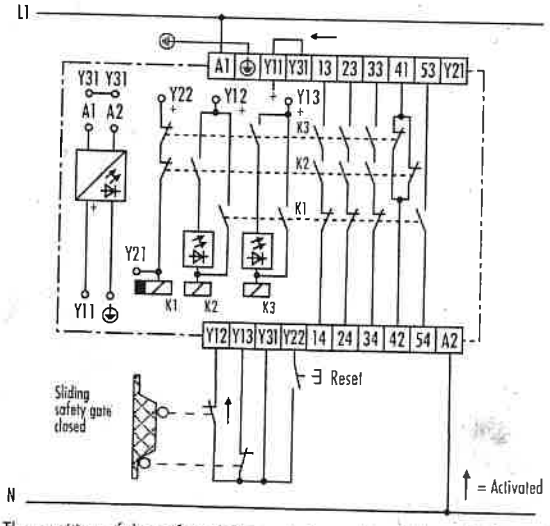

The position of the safety sliding gate is monitored through channel 1 (Y12) and channel 2 (Y13). The SNO 1002 is activated through the RESET switch. If the sliding safety gate opens, the E-Stop Safety Relay returns to its off-position and the enabling current paths 13/14, 23/24, 33/34 open. If the safety gate is closed again the E-Stop Safety Relay can be activated again through the RESET switch.

Application Example

A 1003

Single-Channel Emergency-Stop Circuit

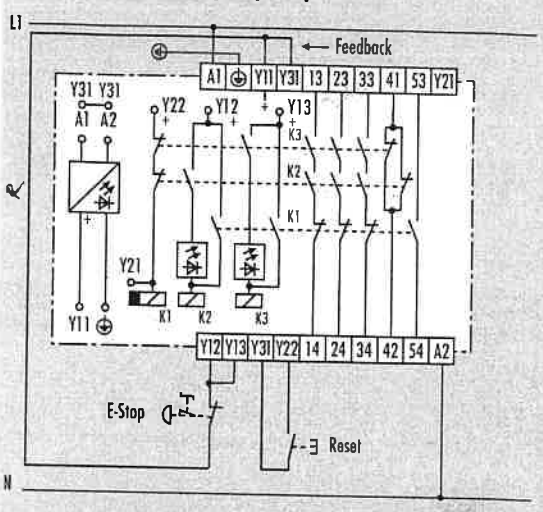

The single channel fulfills the requirements of EN 60204-1. However the circuit of the E-Stop is not redundant. Ground faults in the circuit for the E-Stop contact are detected.

Application Example

A 1004

External Contact Expansion

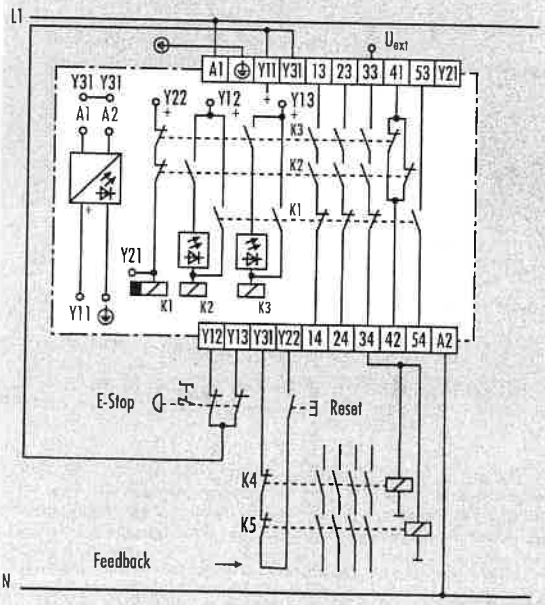

When the SNO 1002 is activated through Y22, the enabling current path 33/34 closes. The external contactors K4 and K5 switch into their operating position. If the E-Stop button is activated, the current paths Y12 and Y13 become de-energized. K2 and K3 drop out. Thus, the enabling current paths 33/34 opens and the external contactors K4 and K5 likewise switch into their off position. In case of a fault in the contactors K4 and K5 a restart of the E-Stop Safety Relay is prevented by the feedback circuit.

- ▶ Contactors K4 und K5 must have positively driven contacts.
- ▶ Please note the directives of your Professional Association.

Emergency-Stop Relay

Basic Unit
According to EN 60204 - 1 and EN 954 - 1
Feedback Circuit for Monitoring External Contactors
Single or Dual Channel E-Stop Circuit is Possible
With Monitoring of the RESET Switch
Rated Voltage in the E-Stop Control Circuit: 24 V DC

SNO 1002	EN 60204-1	For Stop Category	0
	EN 954-1	Safety Category	4

1

SNO 1002

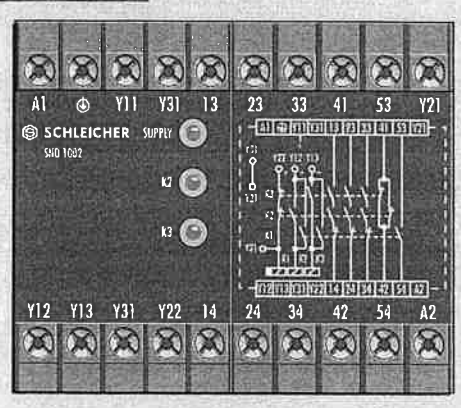

For example

- Protection of persons and machines
- Monitoring of sliding safety screens
- Protective measures on industrial robots
- In conjunction with programmable logic control systems

Function

After the supply voltage is applied to terminals A1/A2, and if the E-stop switch is not activated, the relay K1 is energized by the RESET switch. The contacts of relay K1 trigger the relays K2 and K3. The latter become self-locking through their own contacts. At the same time, the relay contacts of K2 and K3 de-energize relay K1. After a drop-out time delay t_{R1} this relay goes over into its off-position. After this switch-on phase, the three enabling current paths, which are intended for the output, are activated (terminals connection for: enabling current paths = 13/14, 23/24,33/34 control contact = 41/42). The fleeting contact 53/54 is closed only during the time when K1 is energized. It can be used , e.g., for indicator purposes or to monitor the RESET-switch (see application ex. A1001). Three LEDs provide a display, and these LEDs are associated with the safety channels and the power supply.
If the E-Stop switch is activated, the current leads for the K2 and K3 relays are interrupted. The enabling current paths 13/14, 23/24 and 33/34 at the output are opened and the NC 41/42 is closed. The shunt Y31/Y31 is used as a support point to simplify the wiring.

Function Diagram

FD 0108 W1

SNO 1002

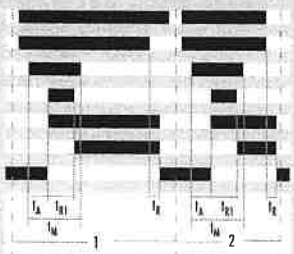

A1/A2 Power Supply, LED SUPPLY
Y12, Y13 E-Stop
Y22 Reset
K 1, 53/54
K2, K3
13/14, 23/24, 33/34, LED K2, LED K3
41/42
t_A = Response Time
t_R = Recovery Time In E-Stop
t_{R1} = Recovery Time K1
t_M = Minimum Switch-on Time
1 = E-Stop at Y12, Y13
2 = E-Stop at A1/A2

Notes

- The emergency-stop control circuit can be monitored for a ground fault through the PE device connection for AC devices.
- The PE connection is omitted for DC devices.
- Devices SNO 1002 and SNO 1004 differ only by their terminal designations.
- To multiply the enabling current paths, expansion units, or external contactive elements with positively driven contacts must be used.

Connection Diagram

KS 0282/4

SNO 1002

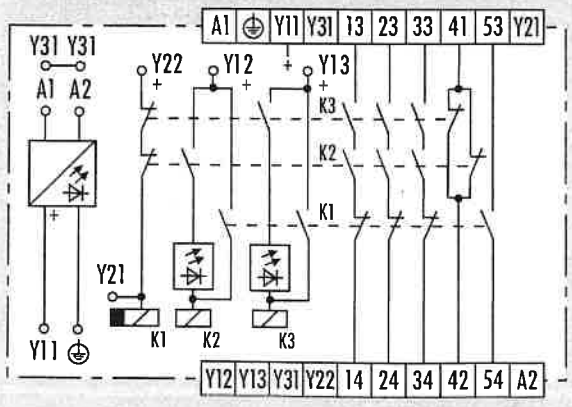

Dimension Diagram

S 4-6

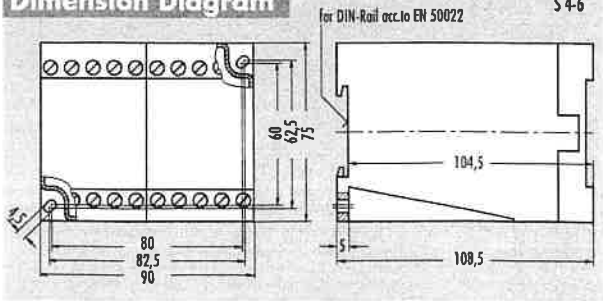

Approvals

ET 95076

Order Example

SNO 1002 230 V AC
Type — Rated Voltage

HA7900A Inkopplingsexempel RT9

040-550012

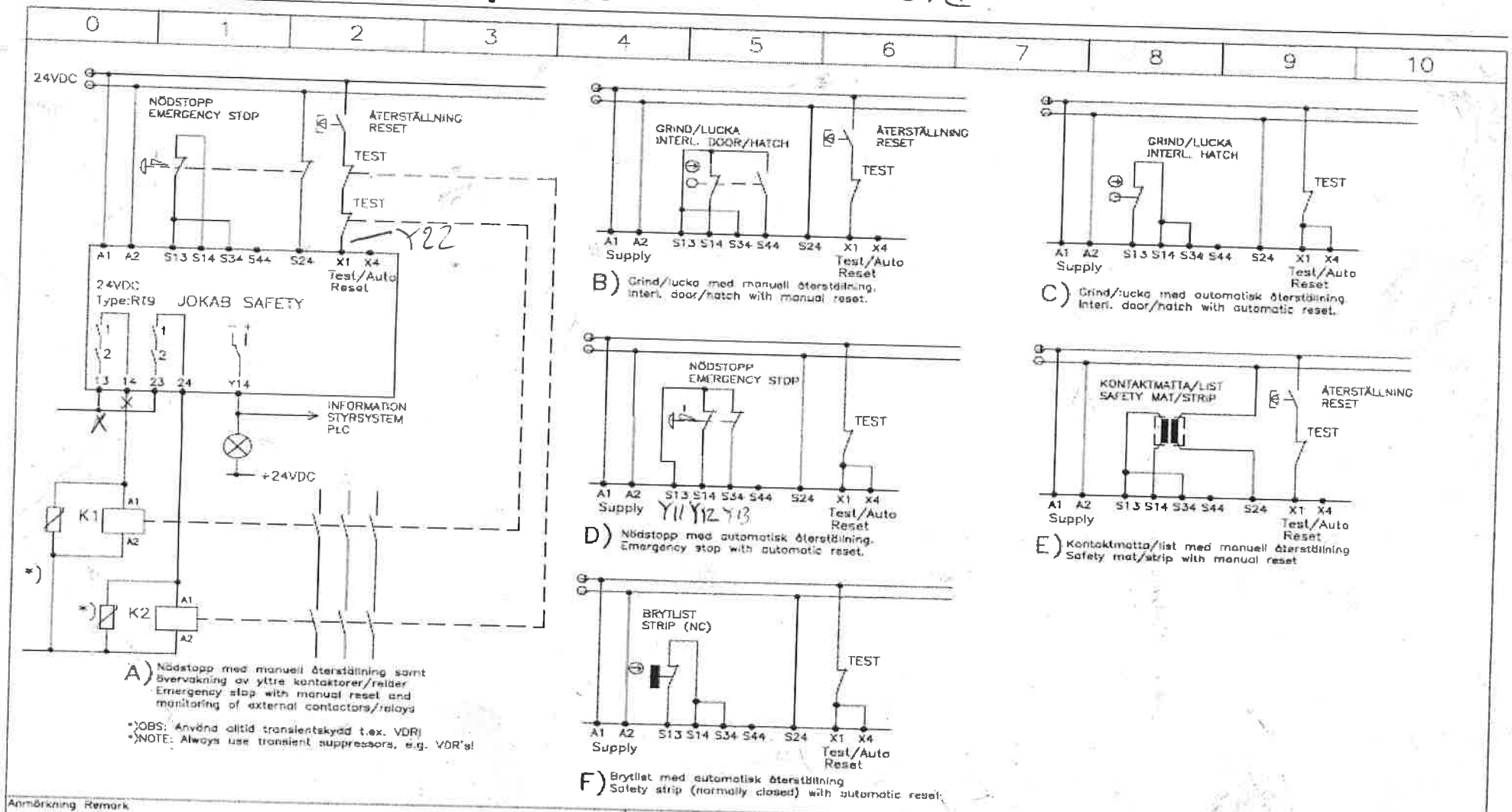

Anmärkning Remark

ANSLUTNINGSEXEMPEL RT9
CONNECTION EXAMPLES RT9

Konstr Design	Godk Appr	Datum Date	Blad Sheet
JS		990120	1
Ritad Drawn	Sidor Pages	Ritn nr Drawing no	Forts Cont
JS	1	HA7900A	–

It is the user's responsibility to ensure that all control devices are correctly installed, cared for and operated to meet all applicable European, national and local codes/regulations. Specifications subject to change without notice.